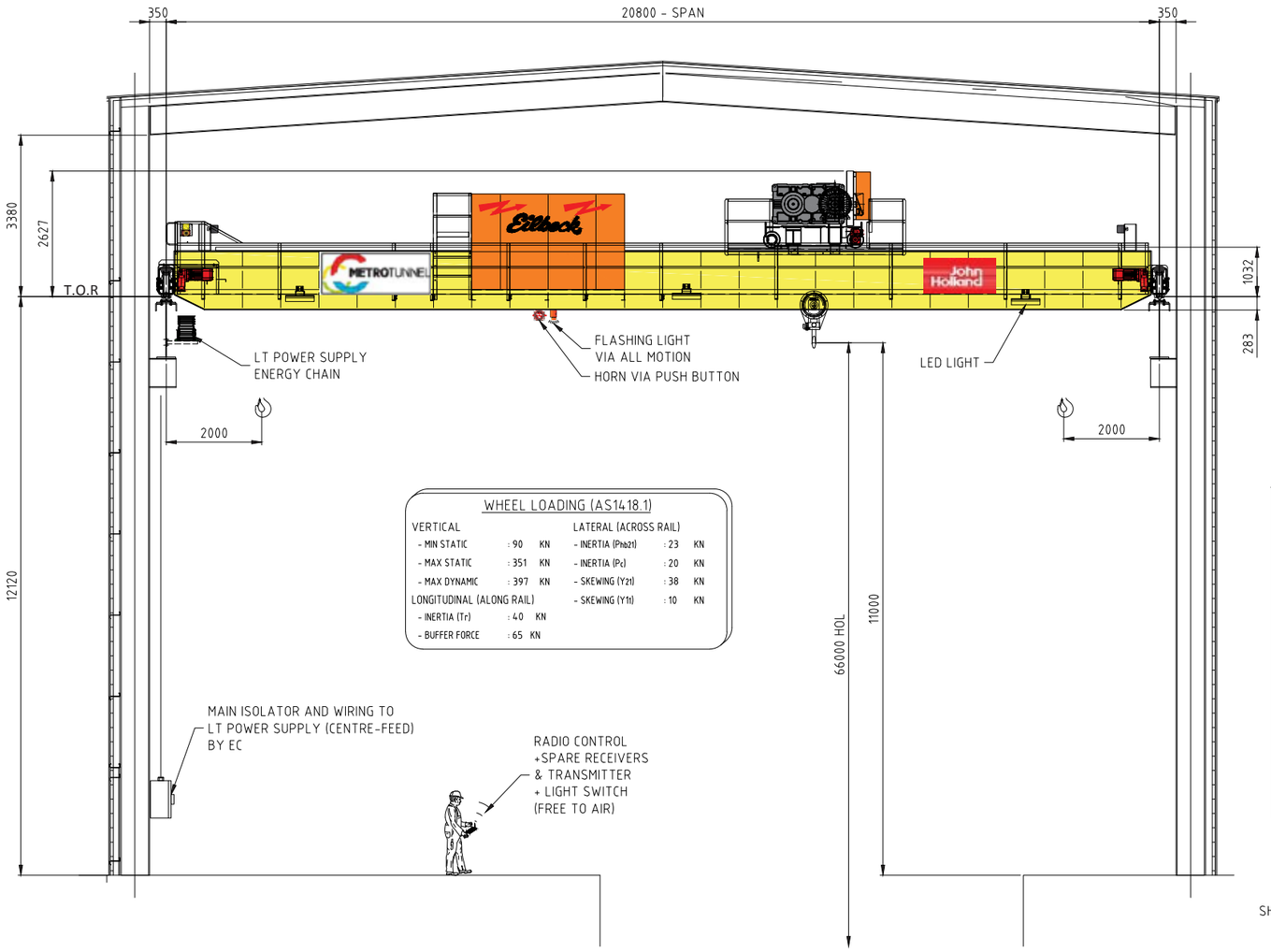

WHEEL LOADING (AS1418.1)

VERTICAL			LATERAL (ACROSS RAIL)		
- MIN STATIC	: 90	KN	- INERTIA (Phb21)	: 23	KN
- MAX STATIC	: 351	KN	- INERTIA (Pc)	: 20	KN
- MAX DYNAMIC	: 397	KN	- SKEWING (Y21)	: 38	KN
LONGITUDINAL (ALONG RAIL)			- SKEWING (Y11)	: 10	KN
- INERTIA (Tr)	: 40	KN			
- BUFFER FORCE	: 65	KN			

ELEVATION

- SAME CRAB SHOWN IN TWO EXTREME POSITIONS -

NORTH SOUTH

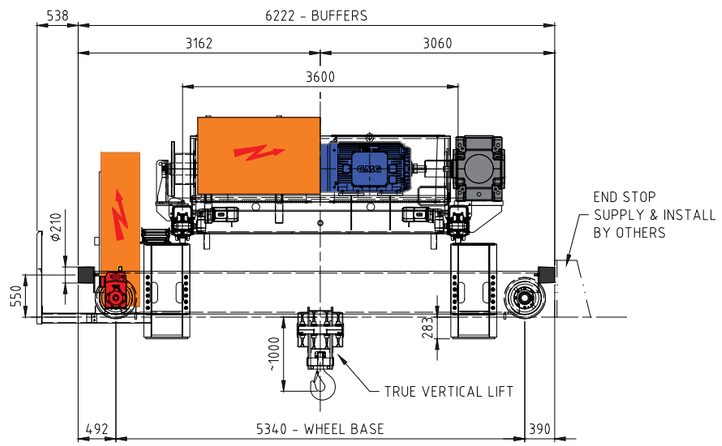

SIDE VIEW

WEST EAST

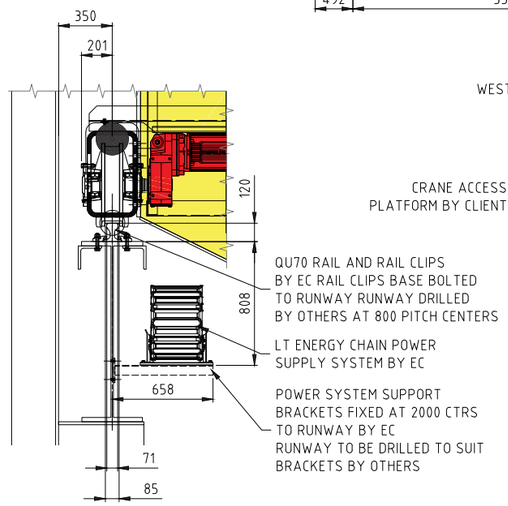

END DETAILS

SHOWING WHEEL AND RAIL INTERFACE

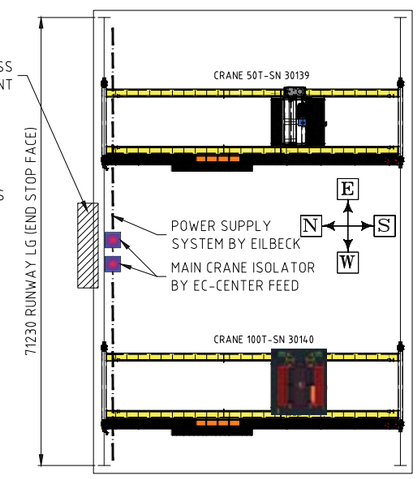

EB.BUILDDINGGPPLAAN

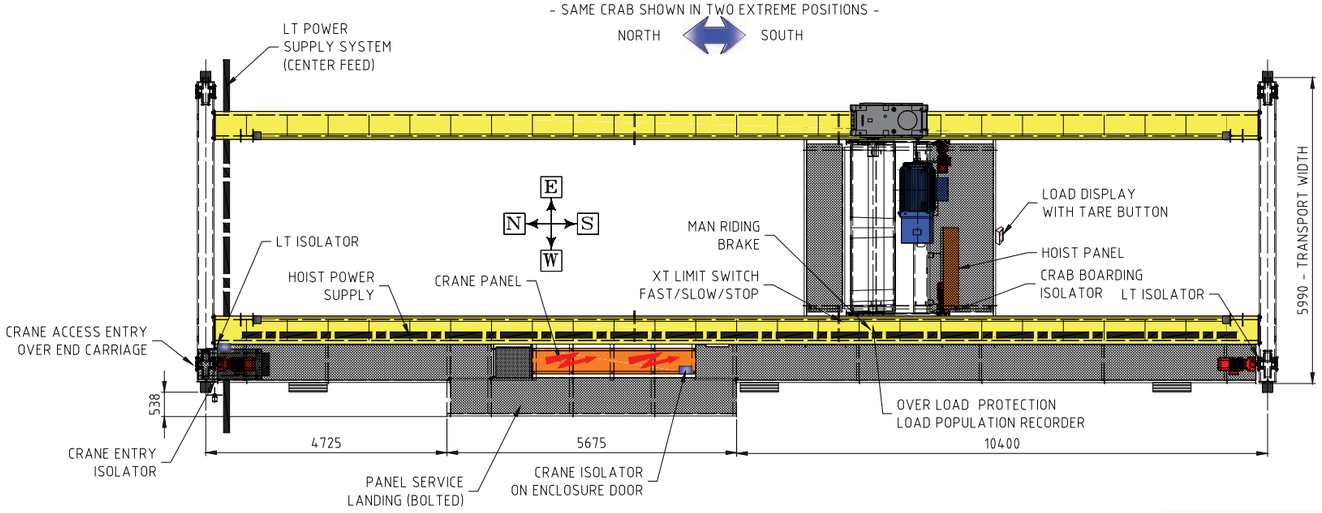

PLAN

CRAB SHOWN IN SERVICE POSITION

TECHNICAL SPECIFICATION

1. CRANE BRIDGE

RATED CAPACITY	: 50 t MRC (INCLUDING KIBBLE)
CRANE SPAN	: 20800 mm
CRANE TYPE/MODEL	: ZLK-EC
MANUFACTURER	: EILBECK CRANES
STRUCTURAL CLASS	: S4 (AS 1418.1)
CRANE SPEED (LT)	: 40-4 m/min (VSD)
RUNWAY LENGTH	: 71.230 m
STRUCTURAL PAINTING	: EC STANDARD (SYSTEM E1)
CRANE BRIDGE WEIGHT	: 23700 kg (w/o HOISTS)

2. HOIST

RATED CAPACITY	: 50 t (INCLUDING KIBBLE WEIGHT)
MODEL	: ES10125-92.4/2-1.55.D.315.40
MANUFACTURER	: EILBECK CRANES
MECHANISM CLASS (AS1418)	: M4 @50T / M6@25T
LIFTING SPEED (50T)	: 22-2.2 m/min (VSD)-50 Hz
LIFTING SPEED (25T)	: 35-2.2 m/min (VSD)-85 Hz
HOOK DROP	: 66 m
CRAB SPEED (CT)	: 20-2 m/min (VSD)
PAINTING	: EC SYSTEM H1
CRAB WEIGHT	: 14500 kg
TOTAL UTILIZATION HOURS AT FULL LOAD (50T)	: 800 HOURS

3. MAN RIDING MODE:

CAPACITY	: 2000 kg
LIFTING SPEED	: 10 m/min
MECHANISM CLASS	: M6

4. GENERAL:

GROUP CLASS	: C4 (AS 1418.1)
CONTROL	: RADIO CONTROL
POWER DEMAND	: 265 kW
SUPPLY VOLTAGE	: 415V (±6%)/ 50Hz / 3PH+E
MOTORS DUTY (ED)	: 100% - S1
CONTROL VOLTAGE	: 24 VDC
OPERATING LOCATION	: INDOORS
PROTECTION TYPE	: IP55
AMBIENT TEMPERATURE	: 0-45°
TOTAL CRANE WEIGHT	: 38200 kg
EC SERIAL No.	: 30139

REV	DATE	REVISION DESCRIPTION	DRN	CHK	APP
0	26.07.17	ISSUED FOR CONSTRUCTION	MA	TH	TLE

DESIGN REFERENCES
STRUCTURAL REF 26710-EDC-200
STRUCTURAL BY NB
REGO BODY WORKSAFE VIC
MECHANICAL TH
ELECTRICAL AW

APPROVAL FOR CONSTRUCTION
CHECKED
APPROVED TE
DATE
SIGNED Digitally signed by Tom Eilbeck Date: 2017.07.27 15:50:16 +08'00'

CLIENT JOHN HOLLAND Pty Ltd
PROJECT MELBOURNE METRO TUNNEL EARLY WORKS PROJECT
EQUIPMENT ID FRANKLIN STREET SHAFT CRANE 1 - 50T

copyright by Eilbeck Cranes www.eilbeckcranes.com.au

DWG TITLE
50T MRC OVERHEAD CRANE 'ZLK'
ASSEMBLY AND ARRANGEMENT DRAWINGS
CRANE GENERAL ARRANGEMENT - CN200

SCALE NTS SIZE A1 UNITS mm DWG NO 35507-DMS-200 REV 0

NOTES FOR CRANE INSTALLATION:

1. TIGHTEN ALL BOLTS AS PER BOLT SCHEDULE AND TORQUE PROVIDED AFTER COMPLETION OF ALL STRUCTURE ASSEMBLY
2. DO NOT LUBRICATE BOLTS ON ASSEMBLY.
3. MATING SURFACES MUST BE FREE OF OIL, DUST, RUST, IMPURITIES AND PAINTING ON ASSEMBLY
4. CRANE WILL BE FULLY ASSEMBLED AT WORK SHOP AND TRANSPORTED AS A UNIT INCLUDING CRAB ON TOP OF GIRDER (EXCEPT WALKWAY ATTACHMENT).
5. TIE DOWN CRAB TO THE GIRDERS FOR TRANSPORT AND INSTALLATION.
6. LIFT CRANE ASS'Y AS A UNIT AND INSTALL ON THE RAIL THRU THE OPENING ROOF AS SHOWN.

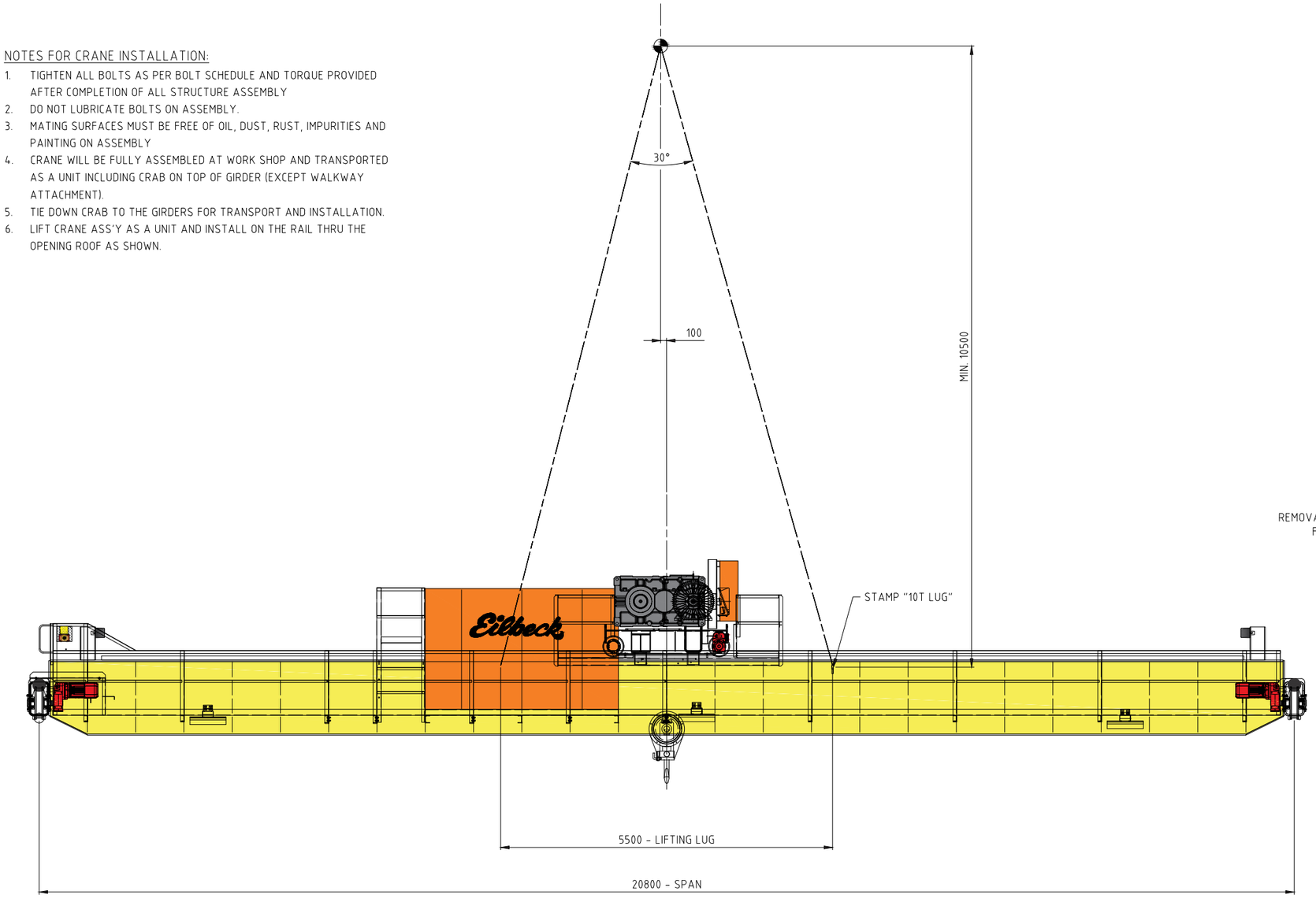

ELEVATION

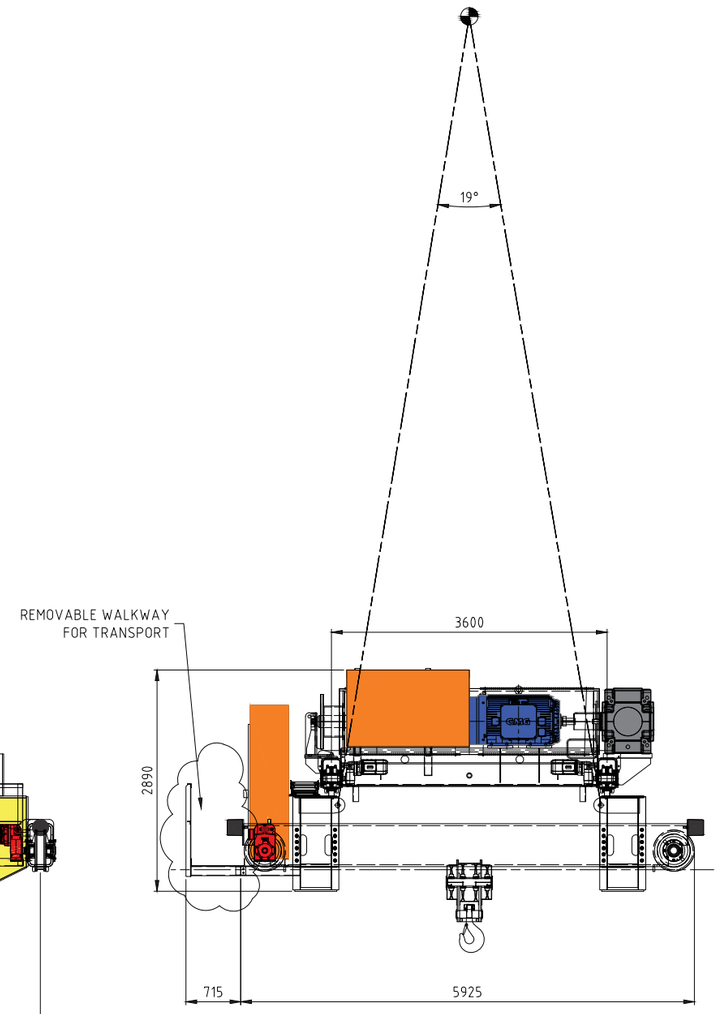

SIDE VIEW

CHECK WEIGHT WHEN WE LIFT ON TO TRUCK IN WORKSHOP

CRAB WEIGHT	= 14500 Kg
STRUCTURE WEIGHT	= 24000 Kg

REV	DATE	REVISION DESCRIPTION	DRN	CHK	APP
0	26.07.17	ISSUED FOR CONSTRUCTION	MA	TH	TLE

DESIGN REFERENCES

STRUCTURAL REF	26710-EDC-200
STRUCTURAL BY	NB
REGO BODY	WORKSAFE VIC
MECHANICAL	TH
ELECTRICAL	AW

APPROVAL FOR CONSTRUCTION

CHECKED	
APPROVED	TE
DATE	
SIGNED	Digitally signed by Tom Eilbeck Date: 2017.10.03 14:38:37 +11'00'

CLIENT: JOHN HOLLAND Pty Ltd
PROJECT: MELBOURNE METRO TUNNEL EARLY WORKS PROJECT
EQUIPMENT ID: FRANKLIN STREET SHAFT CRANE 1 - 50T

copyright by Eilbeck Cranes www.eilbeckcranes.com.au

DWG TITLE
50T MRC OVERHEAD CRANE 'ZLK'
ASSEMBLY AND ARRANGEMENT DRAWINGS
CRANE LIFTING PLAN - CN200

SCALE	SIZE	UNITS	DWG NO	REV
NTS	A1	mm	35507-DMS-208	\ 0

FILE LOCATION - J:\1800-VIC\1800-1960\1950\35507-JHG-MMEW\Design\1Drawings\1CAD\ECC-35507-DMS-208_A_1800T CRANE GA.dwg

IF IN DOUBT PLEASE ASK

35507-DMS-209 \ REV 0

200

250

Eilbeck CRANES

100 Years % Australian

7mm HIGH TEXT

CRANE DATA

MANUFACTURER :	EILBECK CRANES
SERIAL NUMBER :	30139
YEAR OF MANUFACTURE :	2017
CRANE TYPE/MODEL :	ZLK
RATED CAPACITY:	50 t
CRANE CLASS :	C4
POWER DEMAND :	270 kW
CRANE LONG TRAVEL SPEED :	40-4 m/min

HOIST DATA

HOIST MODEL :	ES10125-92.4/2-1.66.D.315.20
RATED CAPACITY:	50 t
HOIST CLASS :	M4
HOISTING SPEED (50t) :	22-2.2 m/min
HOISTING SPEED (25t) :	35-2.5 m/min
CRAB CROSS TRAVEL SPEED :	20-2 m/min
WIRE ROPE DIAMETER :	24 mm
WIRE ROPE LENGTH :	2 OFF - 147m EACH
WIRE ROPE CONSTRUCTION :	QS816V(G)

MAN-RIDING MODE

RATED CAPACITY:	2 t
HOIST CLASS :	M6
HOISTING SPEED :	10 m/min MAX.

BRAKE ACTING ON HOIST DRUM ACTIVE ONLY IN PERSONNEL LIFTING MODE. FOR MANUAL RELEASE OF BRAKE DURING EMERGENCY LOWERING OF PERSONNEL REFER TO SIGN ON BRAKE

www.eilbeckcranes.com

NAME PLATE MATERIAL : S/S GR304
NAME PLATE DIMENSIONS : 200x250x0.9
TEXT HEIGHT : 5mm (U.O.N.) - LASER ETCHED

REV	DATE	REVISION DESCRIPTION	DRN	CHK	APP
0	31.07.17	ISSUED FOR CONSTRUCTION	MA	TH	TLE

DESIGN REFERENCES

STRUCTURAL REF	35507-EDC-200
STRUCTURAL BY	NB
REGO BODY	WORKSAFE-VIC
MECHANICAL	TH
ELECTRICAL	AW

APPROVAL FOR CONSTRUCTION

CHECKED	
APPROVED	TLE
DATE	
SIGNED	Digitally signed by Mojtaba DN: cn=Mojtaba, o=Eilbeckcranes, ou, email=m.afjool@eilbeckcranes.com, c=AU Date: 2017.07.31 15:20:26 +10'00'

CLIENT JOHN HOLLAND Pty Ltd
PROJECT MELBOURNE METRO TUNNEL EARLY WORKS
EQUIPMENT ID FRANKLIN STREET SHAFT CRANE 1

Eilbeck CRANES 100 Years % Australian

copyright by Eilbeck Cranes www.eilbeckcranes.com.au

DWG TITLE
50T MRC OVERHEAD 'ZLK' CRANE
ARRANGEMENT AND ASSEMBLIES DRAWINGS
CRANE NAME PLATE (MOUNTED ON CRAB)

SCALE	SIZE	UNITS	DWG NO	REV
NTS	A3	mm	35507-DMS-209	\ 0

FILE LOCATION - J:\J3000-VIC\35501-35600\35507 JHG MMEW\Design\1 Drawings\1 CAD\ECE-35507-DMS-(209) (Nameplate).dwg