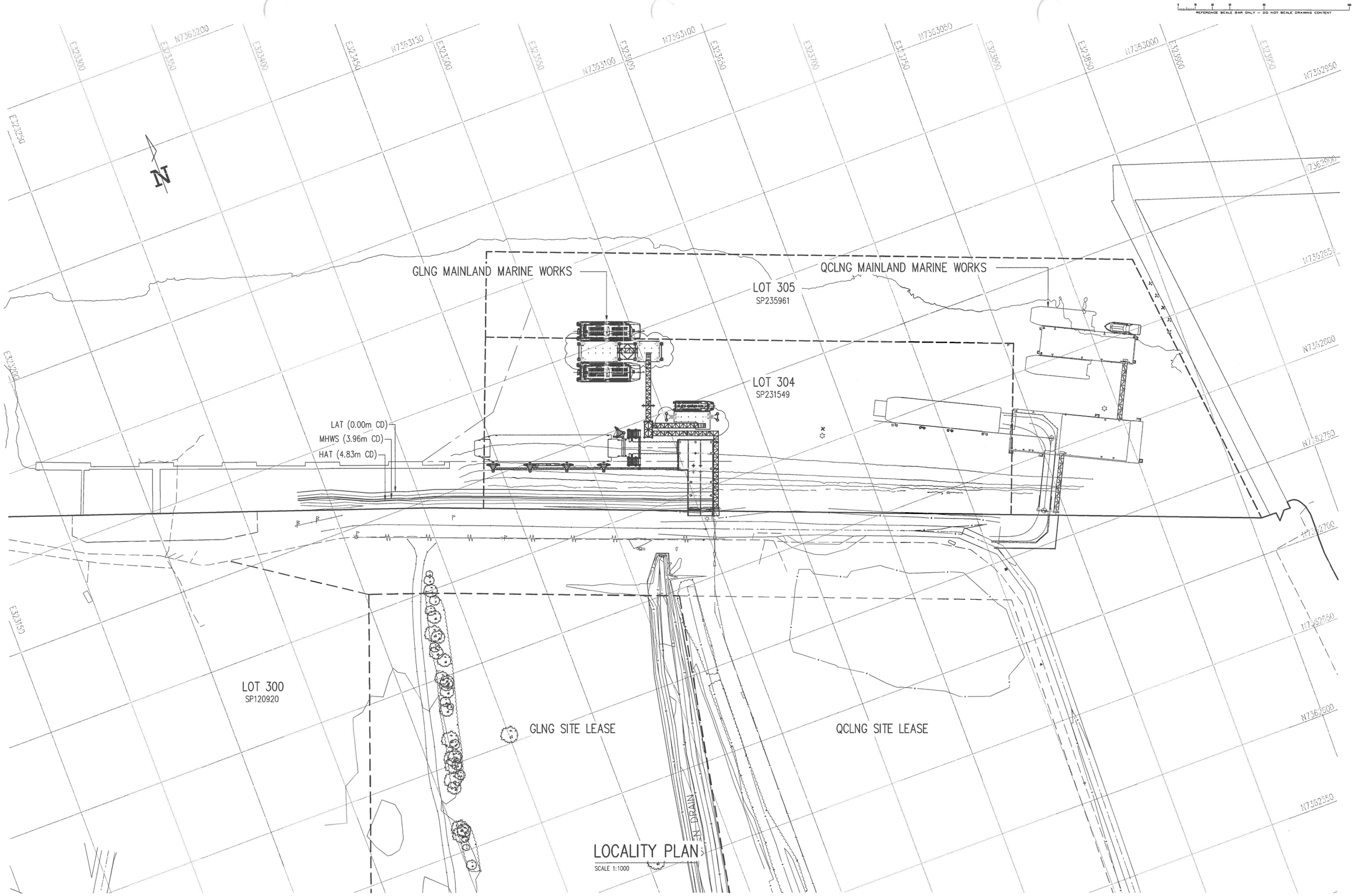

LOCALITY PLAN

SCALE 1:1000

COPYRIGHT
All rights reserved.
These drawings, plans and specifications and the copyright therein are the property of the Bonacci Group and must not be used, reproduced or copied wholly or in part without the written permission of the Bonacci Group.

Issue	Revision	Date	By	App.
P5	PROGRESS ISSUE	16.11.10	TKM	TJM
P4	RE-ISSUED FOR PERMIT	21.10.10	TKM	TJM
P3	ISSUED FOR PERMIT	04.10.10	TKM	TJM
P2	PRELIMINARY ISSUE	17.09.10	TKM	TJM
P1	PRELIMINARY ISSUE	31.08.10	TKM	TJM

Issue	Revision	Date	By	App.
2	ISSUED FOR CONSTRUCTION	08.04.11	TKM	TJM
1	ISSUED FOR CONSTRUCTION	01.02.11	TKM	TJM
0	ISSUED FOR CONSTRUCTION	22.12.10	TKM	TJM
P6	ISSUED FOR PROCUREMENT	03.12.10	TKM	TJM

Issue	Revision	Date	By	App.

GOLDING

LNG

BECHTEL

BONACCI

Bonacci Group (Qld) Pty Ltd
ABN 72 010 964 664
Structural, Civil and Infrastructure Engineers
10 Finchley Street (PO Box 1299) Milton Queensland 4064 Australia
Tel : +61 7 3510 7222 Fax : +61 7 3368 1751
Email : bonq@bonaccigld.com
Web Site : www.bonaccigroup.com

Project
GLNG: MAINLAND FACILITIES
PORT CENTRAL

Drawing Title
LOCALITY PLAN

BONACCI Project Ref	B3618	ISSUED FOR CONSTRUCTION	
Scale AS SHOWN	Designed TJM	Project Director Approved	Date
Date AUG 2010	Drawn TKM		
BECHTEL Doc No.	25577-100-V41-CM00-00005	006	Rev. 2
GLNG Base Doc No.	3310-BTH-3-3.3-96598-5		
GLNG Drawing Code	3310-40 -96598-5		

REFERENCE SCALE BAR ONLY – DO NOT SCALE DRAWING CONTENT

CONTROL POINT SCHEDULE

MARK	EASTING	NORTHING	REMARKS
SOP1	323 629.03	7 362 881.75	GLNG WORK LIMIT LINE
SOP2	323 610.96	7 362 835.13	GLNG WORK LIMIT LINE

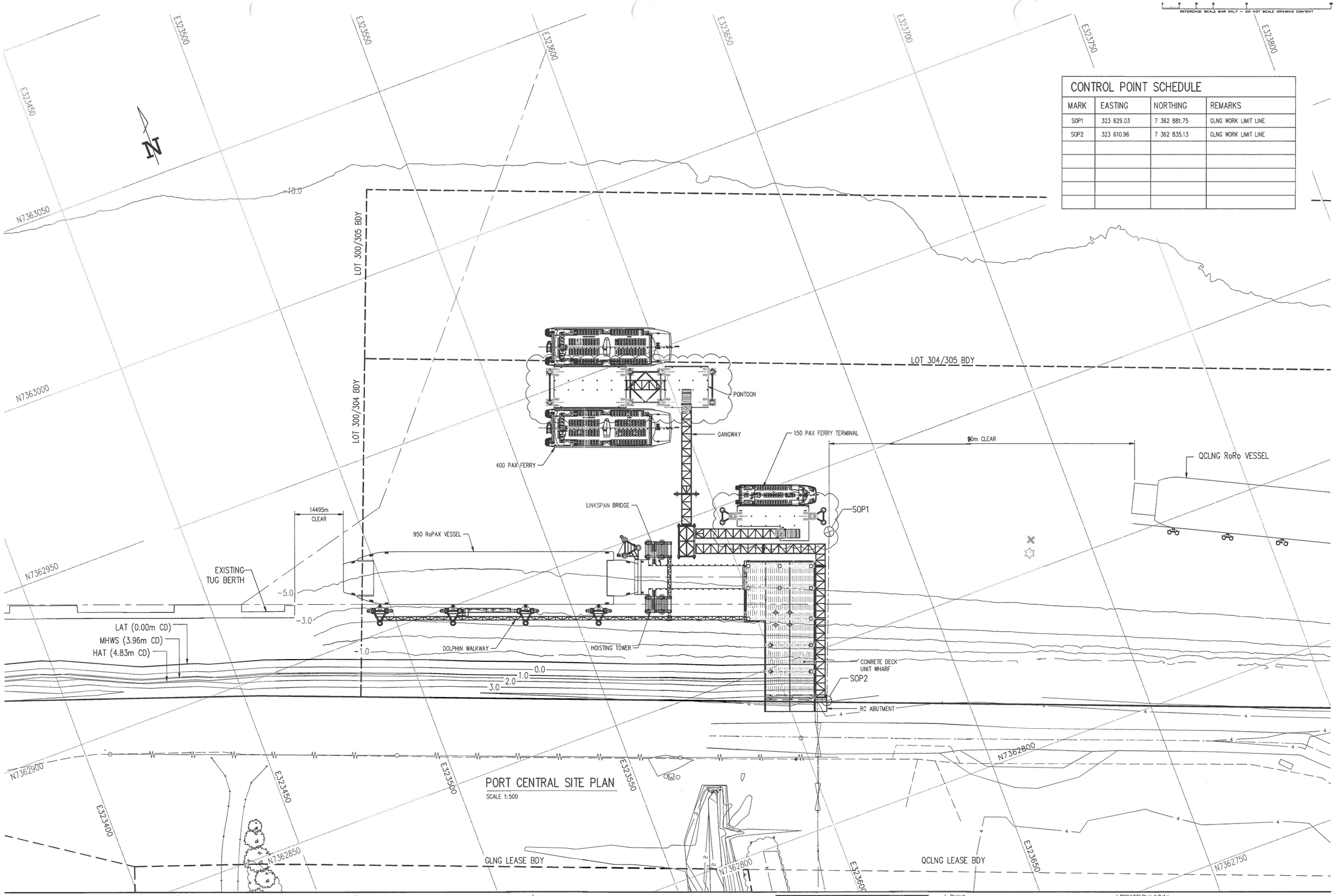

PORT CENTRAL SITE PLAN

SCALE 1:500

COPYRIGHT
All rights reserved.
These drawings, plans and specifications and the copyright therein are the property of the Bonacci Group and must not be used, reproduced or copied wholly or in part without the written permission of the Bonacci Group.

Issue	Revision	Date	By	App.
P5	PROGRESS ISSUE	16.11.10	TKM	TJM
P4	RE-ISSUED FOR PERMIT	21.10.10	TKM	TJM
P3	ISSUED FOR PERMIT	04.10.10	TKM	TJM
P2	PRELIMINARY ISSUE	17.08.10	TKM	TJM
P1	PRELIMINARY ISSUE	06.08.10	TKM	TJM

Issue	Revision	Date	By	App.
2	ISSUED FOR CONSTRUCTION	08.04.11	TKM	TJM
1	ISSUED FOR CONSTRUCTION	01.02.11	TKM	TJM
0	ISSUED FOR CONSTRUCTION	22.12.10	TKM	TJM
P6	ISSUED FOR PROCUREMENT	03.12.10	TKM	TJM

Issue	Revision	Date	By	App.

Bonacci Group (Qld) Pty Ltd
ABN 72 010 964 664
Structural, Civil and Infrastructure Engineers
10 Finchley Street (PO Box 1299) Milton Queensland 4064 Australia
Tel : +61 7 3510 7222 Fax : +61 7 3368 1751
Email : bonq@bonaccigld.com
Web Site : www.bonaccigroup.com

Project
GLNG: MAINLAND FACILITIES
PORT CENTRAL

Drawing Title
SITE PLAN

BONACCI Project Ref B3618	ISSUED FOR CONSTRUCTION		
Scale AS SHOWN	Designed TJM	Project Director Approved	Date
Date AUG 2010	Drawn TKM		
BECHTEL Doc No.	25577-100-V41-CM00-00006	007	Rev. 2
GLNG Base Doc No.	3310-BTH-3-3.3-96598-6		
GLNG Drawing Code	3310-40 -96598-6		

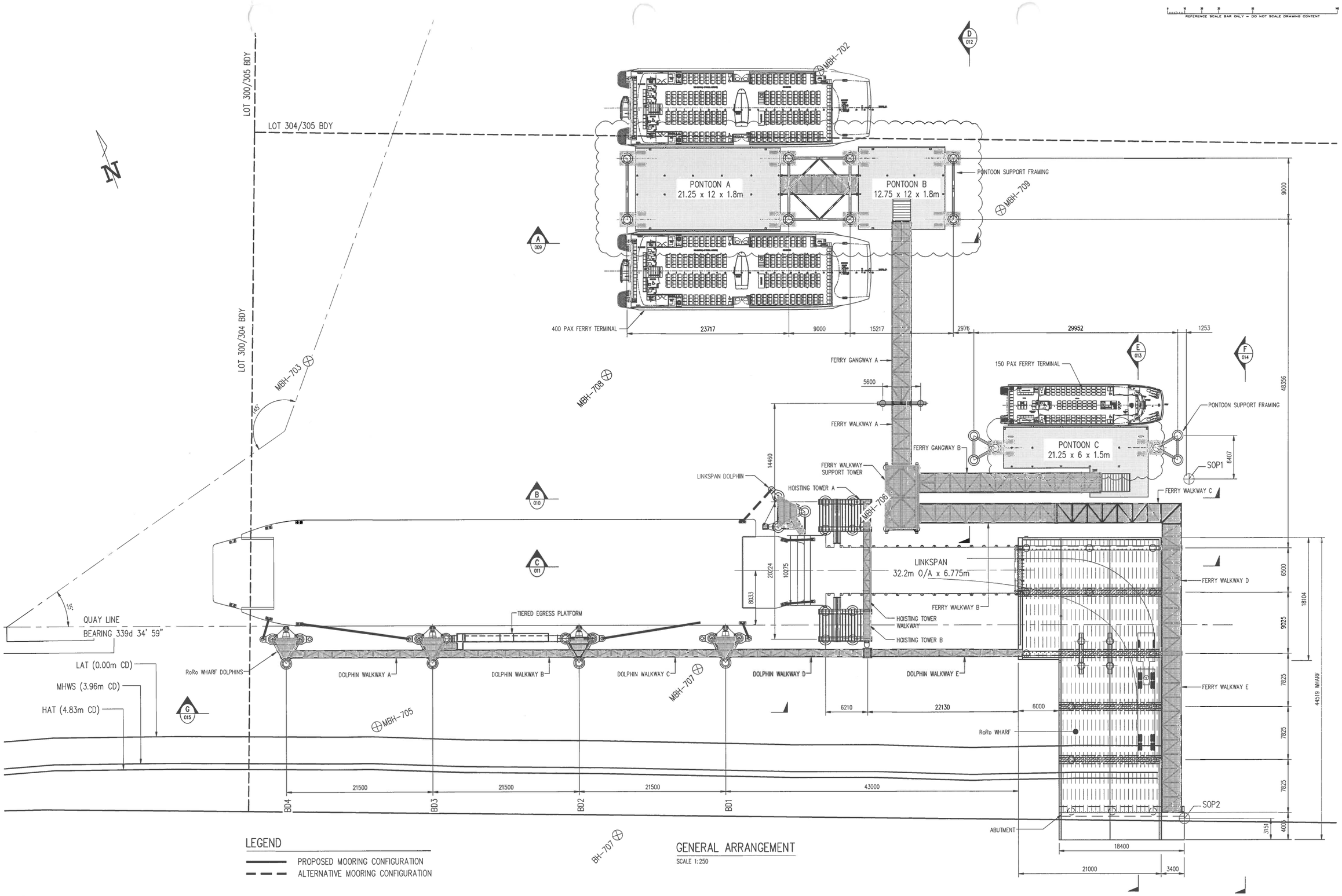

COPYRIGHT All rights reserved.
These drawings, plans and specifications and the copyright therein are the property of the Bonacci Group and must not be used, reproduced or copied wholly or in part without the written permission of the Bonacci Group.

Issue	Revision	Date	By	App.
P5	PROGRESS ISSUE	16.11.10	TKM	TJM
P4	RE-ISSUED FOR PERMIT	21.10.10	TKM	TJM
P3	ISSUED FOR PERMIT	04.10.10	TKM	TJM
P2	PRELIMINARY ISSUE	17.09.10	TKM	TJM
P1	PRELIMINARY ISSUE	31.08.10	TKM	TJM

Issue	Revision	Date	By	App.
3	ISSUED FOR CONSTRUCTION	08.04.11	TKM	TJM
2	ISSUED FOR CONSTRUCTION	03.02.11	TKM	TJM
1	ISSUED FOR CONSTRUCTION	01.02.11	TKM	TJM
0	ISSUED FOR CONSTRUCTION	22.12.10	TKM	TJM
P6	ISSUED FOR PROCUREMENT	03.12.10	TKM	TJM

Issue	Revision	Date	By	App.

BONACCI
Bonacci Group (Qld) Pty Ltd
ABN 72 010 964 664
Structural, Civil and Infrastructure Engineers
10 Finchley Street (PO Box 1299) Milton Queensland 4064 Australia
Tel : +61 7 3510 7222 Fax : +61 7 3368 1751
Email : bonq@bonaccigld.com
Web Site : www.bonaccigroup.com

Project
GLNG: MAINLAND FACILITIES
PORT CENTRAL

Drawing Title
GENERAL ARRANGEMENT
PLAN

BONACCI Project Ref	B3618	ISSUED FOR CONSTRUCTION	
Scale AS SHOWN	Designed T.J.M.	Project Director Approved	Date
Date AUG 2010	Drawn T.K.M.		
BECHTEL Doc No.	25577-100-V41-CM00-00007	008	Rev. 3
GLNG Base Doc No.	3310-BTH-3-3.3-96598-7		
GLNG Drawing Code	3310-40 -96598-7		

REFERENCE SCALE BAR ONLY – DO NOT SCALE DRAWING CONTENT

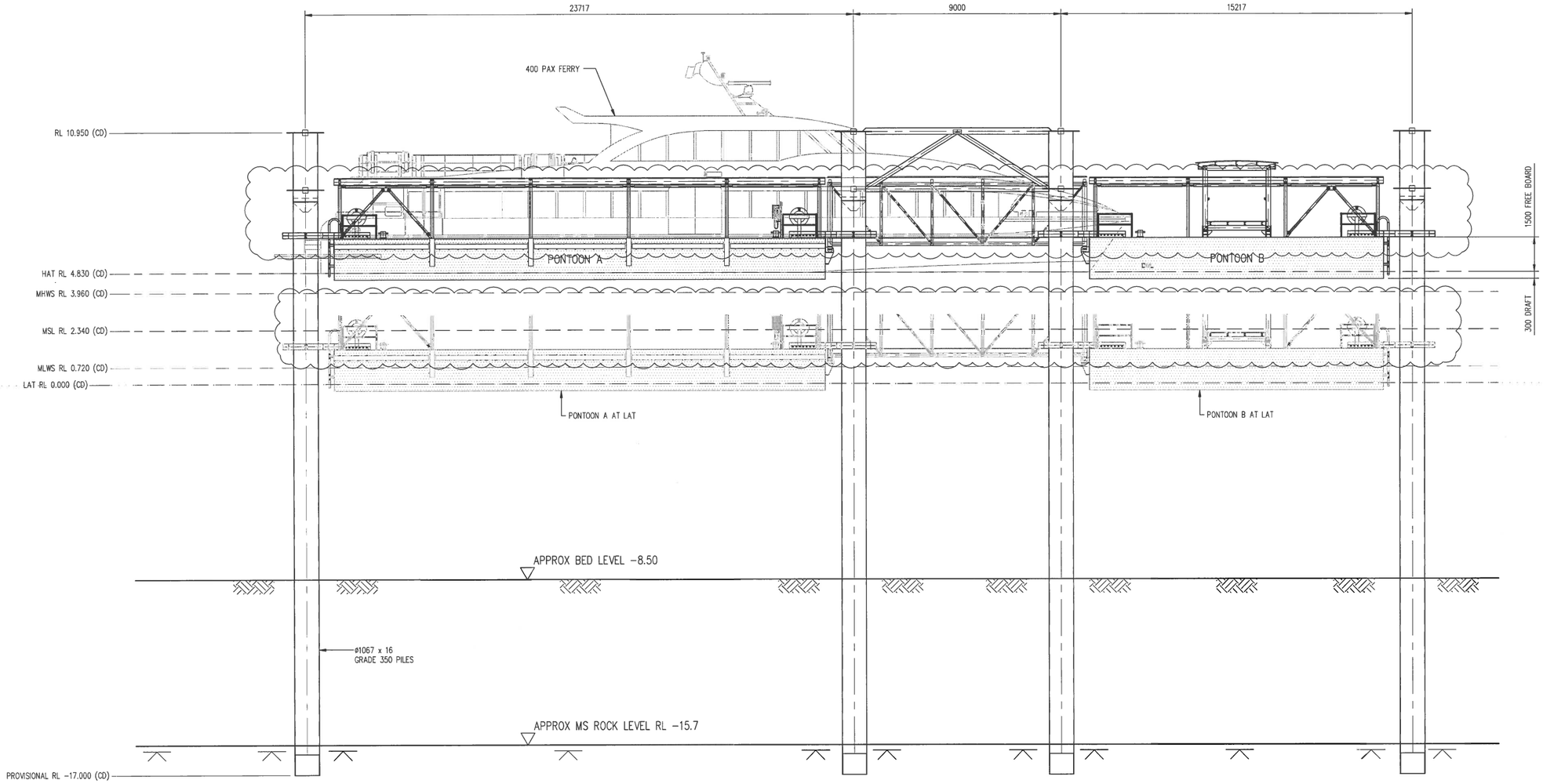

SECTION A 008
SCALE 1:100

COPYRIGHT
All rights reserved.
These drawings, plans and specifications and the copyright therein are the property of the Bonacci Group and must not be used, reproduced or copied wholly or in part without the written permission of the Bonacci Group.

Issue	Revision	Date	By	App.
P5	PROGRESS ISSUE	16.11.10	TKM	TJM
P4	RE-ISSUED FOR PERMIT	03.11.10	TKM	TJM
P3	ISSUED FOR PERMIT	04.10.10	TKM	TJM
P2	PRELIMINARY ISSUE	17.09.10	TKM	TJM
P1	PRELIMINARY ISSUE	31.08.10	TKM	TJM
2	ISSUED FOR CONSTRUCTION	08.04.11	TKM	TJM
1	ISSUED FOR CONSTRUCTION	01.02.11	TKM	TJM
0	ISSUED FOR CONSTRUCTION	22.12.10	TKM	TJM
P6	ISSUED FOR PROCUREMENT	03.12.10	TKM	TJM

Bonacci Group (Qld) Pty Ltd
ABN 72 010 964 664
Structural, Civil and Infrastructure Engineers
10 Finchley Street (PO Box 1299) Milton Queensland 4064 Australia
Tel : +61 7 3510 7222 Fax : +61 7 3368 1751
Email : bonq@bonaccigld.com
Web Site : www.bonaccigroup.com

Project
GLNG: MAINLAND FACILITIES
PORT CENTRAL
Drawing Title
GENERAL ARRANGEMENT
SECTIONS SHEET 1

BONACCI Project Ref B3618

ISSUED FOR CONSTRUCTION

Scale AS SHOWN	Designed TJM	Project Director Approved	Date
Date AUG 2010	Drawn TKM		
BECHTEL Doc No.	25577-100-V41-CM00-00008		
GLNG Base Doc No.	3310-BTH-3-3.3-96598-B	009	Rev. 2
GLNG Drawing Code	3310-40 -96598-B		

REFERENCE SCALE BAR ONLY – DO NOT SCALE DRAWING CONTENT

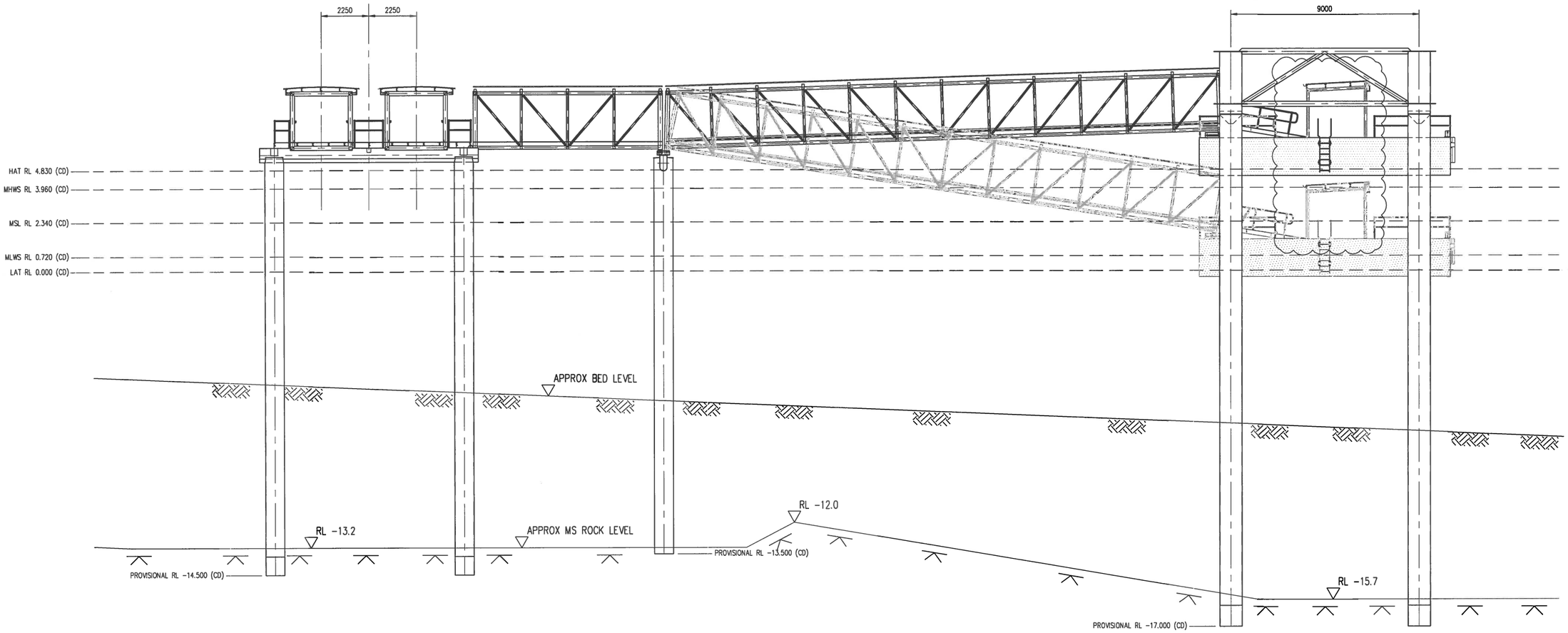

SECTION D 008
SCALE 1:100

COPYRIGHT
All rights reserved.
These drawings, plans and specifications and the copyright therein are the property of the Bonacci Group and must not be used, reproduced or copied wholly or in part without the written permission of the Bonacci Group.

Issue	Revision	Date	By	App.
P5	PROGRESS ISSUE	16.11.10	TKM	TJM
P4	ISSUED FOR PERMIT	21.10.10	TKM	TJM
P3	ISSUED FOR PERMIT	04.10.10	TKM	TJM
P2	PRELIMINARY ISSUE	17.09.10	TKM	TJM
P1	PRELIMINARY ISSUE	31.08.10	TKM	TJM

Issue	Revision	Date	By	App.
2	ISSUED FOR CONSTRUCTION	08.04.11	TKM	TJM
1	ISSUED FOR CONSTRUCTION	01.02.11	TKM	TJM
0	ISSUED FOR CONSTRUCTION	22.12.10	TKM	TJM
P6	ISSUED FOR PROCUREMENT	03.12.10	TKM	TJM

Issue	Revision	Date	By	App.

BONACCI
Bonacci Group (Qld) Pty Ltd
ABN 72 010 964 664
Structural, Civil and Infrastructure Engineers
10 Finchley Street (PO Box 1299) Milton Queensland 4064 Australia
Tel : +61 7 3510 7222 Fax : +61 7 3368 1751
Email : bong@bonaccigld.com
Web Site : www.bonaccigroup.com

Project
GLNG: MAINLAND FACILITIES
PORT CENTRAL
Drawing Title
GENERAL ARRANGEMENT
SECTIONS SHEET 4

BONACCI Project Ref	B3618	ISSUED FOR CONSTRUCTION	
Scale AS SHOWN	Designed T.J.M.	Project Director Approved	Date
Date AUG 2010	Drawn T.K.M.		
BECHTEL Doc No.	25577-100-V41-CM00-00011	012	Rev. 2
GLNG Base Doc No.	3310-BTH-3-3.3-96598-11		
GLNG Drawing Code	3310-40 -96598-11		

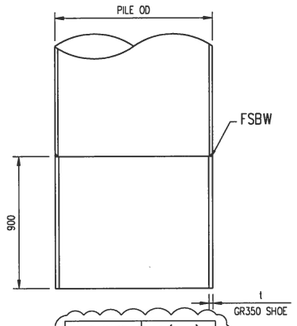

PILE SIZE	t (mm)
ø914	25
ø1067	32
ø1219	32

TYPICAL PILE SHOE DETAIL

SCALE 1:20

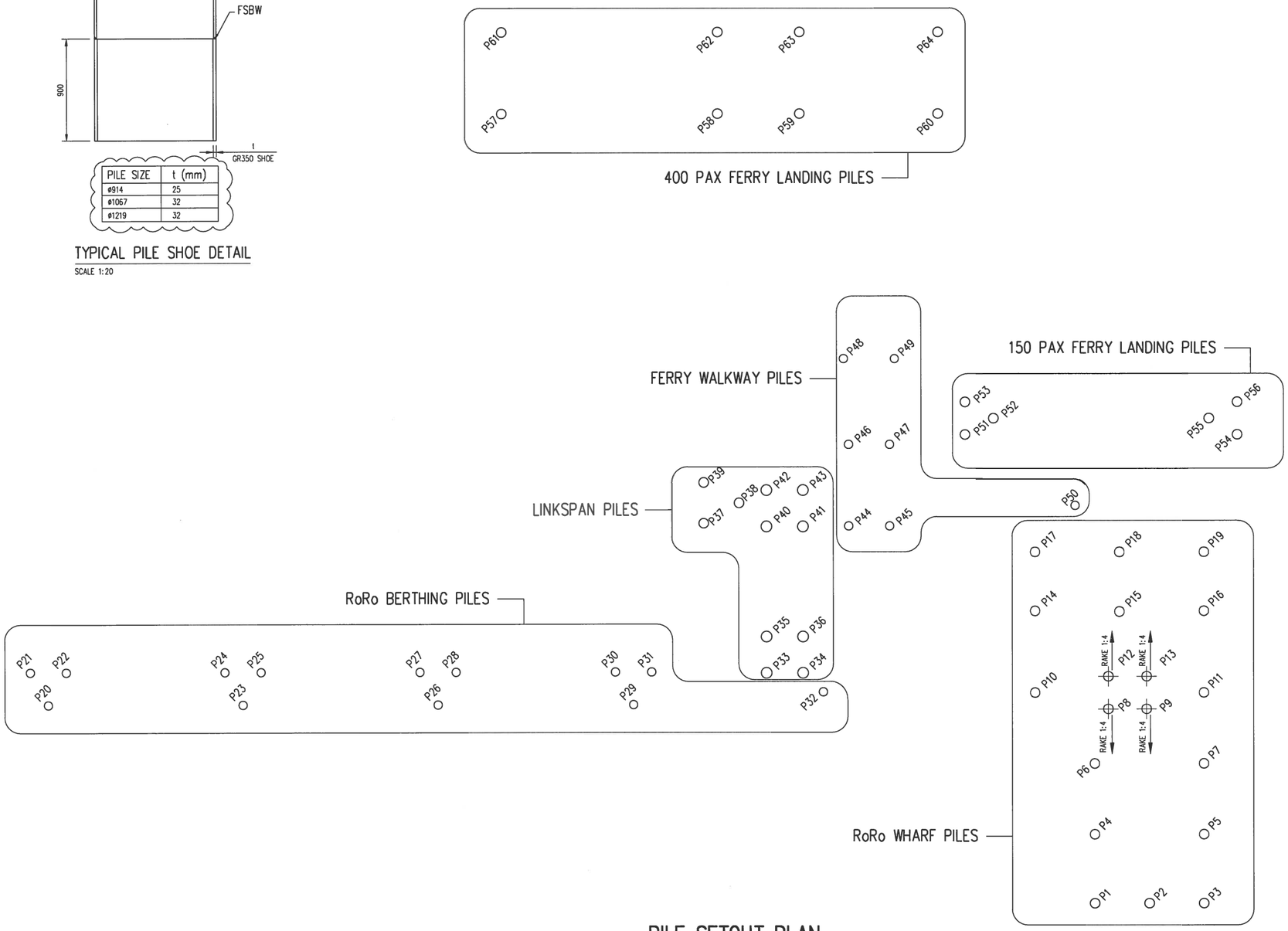

PILE SETOUT PLAN

SCALE 1:250

REFERENCE SCALE BAR ONLY – DO NOT SCALE DRAWING CONTENT

PILE SCHEDULE

MARK	SIZE	PROVISIONAL TOE RL	CUT-OFF RL	CO-ORDINATES		WORKING LOAD	
				EASTING	NORTHING	COMP (kN)	TENSION (kN)
P1	ø1067 x 20	RL -14.500	RL 4.025	323595.721	7362841.919	1350	200
P2	ø1067 x 20	RL -14.500	RL 4.025	323601.344	7362839.826	1350	200
P3	ø1067 x 20	RL -14.500	RL 4.025	323606.967	7362837.733	1350	200
P4	ø1067 x 20	RL -14.500	RL 5.278	323598.383	7362849.072	2300	200
P5	ø1067 x 20	RL -14.500	RL 5.278	323609.630	7362844.886	2300	200
P6	ø1067 x 20	RL -14.500	RL 5.278	323601.113	7362856.405	2300	200
P7	ø1067 x 20	RL -14.500	RL 5.278	323612.359	7362852.219	2300	200
P8	ø1067 x 20	RL -14.500	RL 4.178	323604.621	7362861.528	1450	300
P9	ø1067 x 20	RL -14.500	RL 4.178	323608.557	7362860.063	1450	300
P10	ø1067 x 20	RL -14.500	RL 5.278	323597.658	7362866.041	1500	200
P11	ø1067 x 20	RL -14.500	RL 5.278	323615.089	7362859.552	1500	200
P12	ø1067 x 20	RL -14.500	RL 4.178	323605.877	7362864.902	1450	300
P13	ø1067 x 20	RL -14.500	RL 4.178	323609.813	7362863.437	1450	300
P14	ø1067 x 20	RL -14.500	RL 5.278	323600.806	7362874.499	2400	200
P15	ø1067 x 20	RL -14.500	RL 5.278	323609.522	7362871.255	2650	200
P16	ø1067 x 20	RL -14.500	RL 5.278	323618.237	7362868.010	1500	200
P17	ø1067 x 20	RL -14.500	RL 5.278	323603.073	7362880.591	2150	200
P18	ø1067 x 20	RL -14.500	RL 5.278	323611.789	7362877.346	2150	200
P19	ø1067 x 20	RL -14.500	RL 5.278	323620.505	7362874.102	1600	200
P20	ø914 x 16	RL -15.000	RL 7.000	323495.336	7362902.750	1350	1200
P21	ø914 x 16	RL -15.000	RL 7.000	323494.717	7362906.822	1350	1200
P22	ø914 x 16	RL -15.000	RL 7.000	323498.466	7362905.427	1350	1200
P23	ø914 x 16	RL -15.000	RL 7.000	323515.485	7362895.250	1350	1200
P24	ø914 x 16	RL -15.000	RL 7.000	323514.867	7362899.322	1350	1200
P25	ø914 x 16	RL -15.000	RL 7.000	323518.615	7362897.926	1350	1200
P26	ø914 x 16	RL -15.000	RL 7.000	323535.634	7362887.750	1350	1200
P27	ø914 x 16	RL -15.000	RL 7.000	323535.016	7362891.822	1350	1200
P28	ø914 x 16	RL -15.000	RL 7.000	323538.765	7362890.426	1350	1200
P29	ø914 x 16	RL -15.000	RL 7.000	323555.784	7362880.250	1350	1200
P30	ø914 x 16	RL -15.000	RL 7.000	323555.165	7362884.321	1350	1200
P31	ø914 x 16	RL -15.000	RL 7.000	323558.914	7362882.926	1350	1200
P32	ø914 x 16	RL -15.000	RL 6.184	323575.834	7362874.275	250	200
P33	ø1219 x 20	RL -14.000	RL 11.934	323570.741	7362878.409	1750	750
P34	ø1219 x 20	RL -14.000	RL 11.934	323574.490	7362877.013	1750	750
P35	ø1219 x 20	RL -14.000	RL 11.934	323572.137	7362882.157	1750	750
P36	ø1219 x 20	RL -14.000	RL 11.934	323575.885	7362880.762	1750	750
P37	ø1067 x 16	RL -14.500	RL 8.650	323570.033	7362896.276	1350	600
P38	ø1067 x 16	RL -14.500	RL 8.650	323574.470	7362897.025	1350	600
P39	ø1067 x 16	RL -14.500	RL 8.650	323571.603	7362900.493	1350	600
P40	ø1219 x 20	RL -14.000	RL 11.934	323576.374	7362893.542	1750	750
P41	ø1219 x 20	RL -14.000	RL 11.934	323580.123	7362892.147	1750	750
P42	ø1219 x 20	RL -14.000	RL 11.934	323577.770	7362897.291	1750	750
P43	ø1219 x 20	RL -14.000	RL 11.934	323581.448	7362895.869	1750	750
P44	ø914 x 16	RL -14.500	RL 5.514	323584.846	7362890.440	400	200
P45	ø914 x 16	RL -14.500	RL 5.514	323589.063	7362888.870	400	200
P46	ø914 x 16	RL -14.500	RL 5.514	323587.985	7362898.874	400	200
P47	ø914 x 16	RL -14.500	RL 5.514	323592.203	7362897.304	400	200
P48	ø914 x 16	RL -13.500	RL 5.374	323590.766	7362907.922	300	200
P49	ø914 x 16	RL -13.500	RL 5.374	323596.015	7362905.969	300	200
P50	ø1067 x 16	RL -14.500	RL 5.440	323609.035	7362883.836	400	200
P51	ø1067 x 16	RL -14.500	RL 10.940	323600.389	7362895.404	850	700
P52	ø1067 x 16	RL -14.500	RL 10.940	323603.939	7362896.004	850	700
P53	ø1067 x 16	RL -14.500	RL 10.940	323601.645	7362898.778	850	700
P54	ø1067 x 16	RL -14.500	RL 10.940	323628.460	7362884.955	850	700
P55	ø1067 x 16	RL -14.500	RL 10.940	323626.166	7362887.730	850	700
P56	ø1067 x 16	RL -14.500	RL 10.940	323629.716	7362888.329	850	700
P57	ø1067 x 16	RL -17.000	RL 10.940	323565.029	7362946.349	650	400
P58	ø1067 x 16	RL -17.000	RL 10.940	323587.256	7362938.075	650	400
P59	ø1067 x 16	RL -17.000	RL 10.940	323595.691	7362934.936	650	400
P60	ø1067 x 16	RL -17.000	RL 10.940	323609.952	7362929.627	650	400
P61	ø1067 x 16	RL -17.000	RL 10.940	323568.169	7362954.784	650	400
P62	ø1067 x 16	RL -17.000	RL 10.940	323590.396	7362946.510	650	400
P63	ø1067 x 16	RL -17.000	RL 10.940	323598.831	7362943.370	650	400
P64	ø1067 x 16	RL -17.000	RL 10.940	323613.092	7362938.062	650	400

COPYRIGHT All rights reserved.
These drawings, plans and specifications and the copyright therein are the property of the Bonacci Group and must not be used, reproduced or copied wholly or in part without the written permission of the Bonacci Group.

Issue	Revision	Date	By	App.
2	ISSUED FOR CONSTRUCTION	10.02.11	TKM	TJM
1	ISSUED FOR CONSTRUCTION	01.02.11	TKM	TJM
0	ISSUED FOR CONSTRUCTION	22.12.10	TKM	TJM

Issue Revision Date By App.

Issue Revision Date By App.

Bonacci Group (Qld) Pty Ltd
ABN 72 010 964 664
Structural, Civil and Infrastructure Engineers
10 Finchley Street (PO Box 1299) Milton Queensland 4064 Australia
Tel : +61 7 3510 7222 Fax : +61 7 3368 1751
Email : bonq@bonaccigld.com
Web Site : www.bonaccigroup.com

Project
GLNG: MAINLAND FACILITIES
PORT CENTRAL

Drawing Title
PILE SETOUT PLAN

BONACCI Project Ref B3618	ISSUE FOR CONSTRUCTION		
Scale AS SHOWN	Designed TJM	Project Director Approved	Date
Date SEP 2010	Drawn TKM		
BECHTEL Doc No.	25577-100-V41-CM00-00190	016	Rev. 2
GLNG Base Doc No.	3310-BTH-3-3.3-96598-190		
GLNG Drawing Code	3310-40 -96598-190		

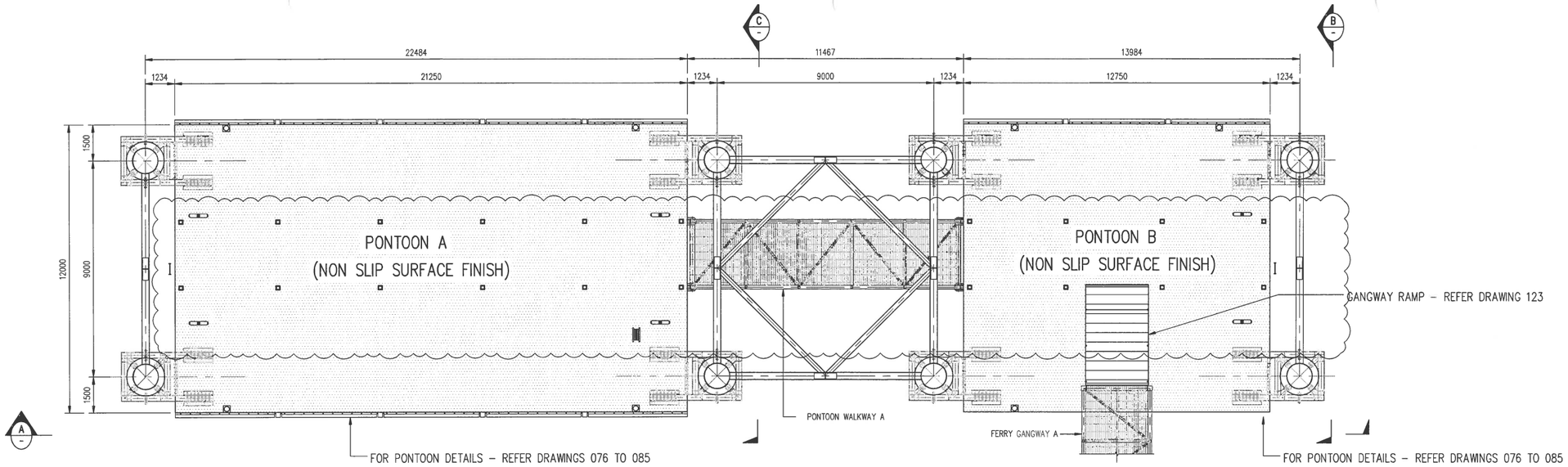

400 PAX FERRY LANDING SETOUT PLAN

SCALE 1:100

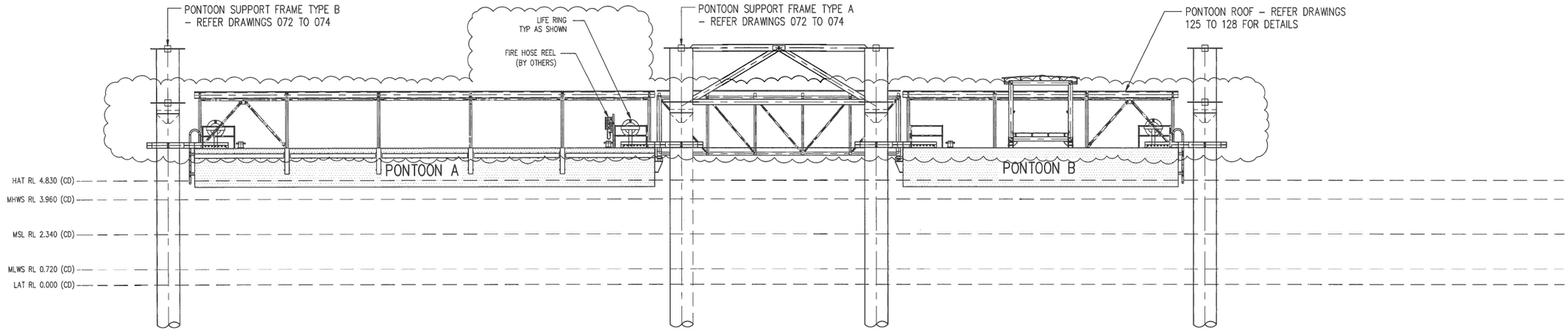

SECTION A
SCALE 1:100

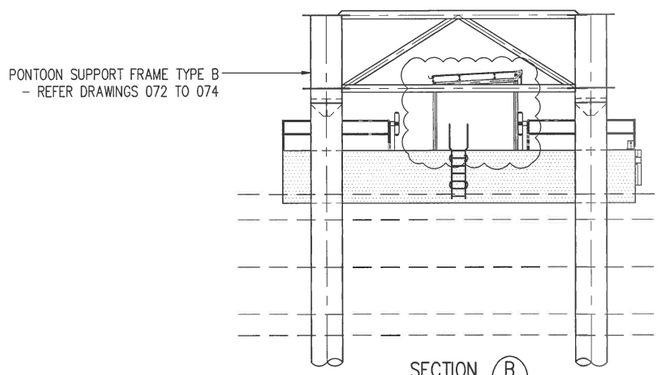

SECTION B
SCALE 1:100

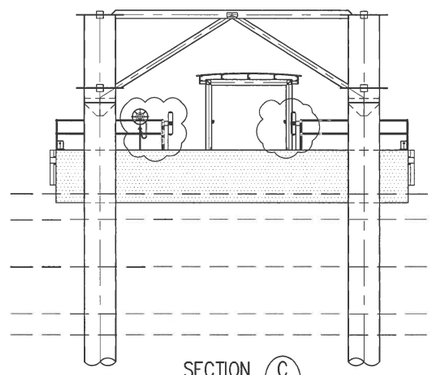

SECTION C
SCALE 1:100

COPYRIGHT
All rights reserved.
These drawings, plans and specifications and the copyright therein are the property of the Bonacci Group and must not be used, reproduced or copied wholly or in part without the written permission of the Bonacci Group.

Issue	Revision	Date	By	App.
0	ISSUED FOR CONSTRUCTION	22.12.10	TKM	TJM
P4	ISSUED FOR PROCUREMENT	03.12.10	TKM	TJM
P3	PROGRESS ISSUE	16.11.10	TKM	TJM
P2	RE-ISSUED FOR PERMIT	03.11.10	TKM	TJM
P1	ISSUED FOR PERMIT	04.10.10	TKM	TJM
2	ISSUED FOR CONSTRUCTION	08.04.11	TKM	TJM
1	ISSUED FOR CONSTRUCTION	01.02.11	TKM	TJM

Bonacci Group (Qld) Pty Ltd
ABN 72 010 964 664
Structural, Civil and Infrastructure Engineers
10 Finchley Street (PO Box 1299) Milton Queensland 4064 Australia
Tel : +61 7 3510 7222 Fax : +61 7 3368 1751
Email : bonq@bonaccigld.com
Web Site : www.bonaccigroup.com

Project
GLNG: MAINLAND FACILITIES
PORT CENTRAL

Drawing Title
400 PAX FERRY LANDING
SETOUT PLAN

BONACCI Project Ref	B3618	ISSUED FOR CONSTRUCTION	
Scale AS SHOWN	Designed DMK	Project Director Approved	Date
Date SEP 2010	Drawn TKM		
BECHTEL Doc No.	25577-100-V41-CM00-00021	071	Rev. 2
GLNG Base Doc No.	3310-BTH-3-3.3-96598-21		
GLNG Drawing Code	3310-40 -96598-21		

REFERENCE SCALE BAR ONLY – DO NOT SCALE DRAWING CONTENT

PONTOON SUPPORT FRAME MEMBER SCHEDULE		
MARK	MEMBER	REMARKS
a	300 x 12.5 SHS	
b	250 x 12.5 SHS	
c	200 x 9 SHS	

LEGEND

(FS) – DENOTES FAR SIDE

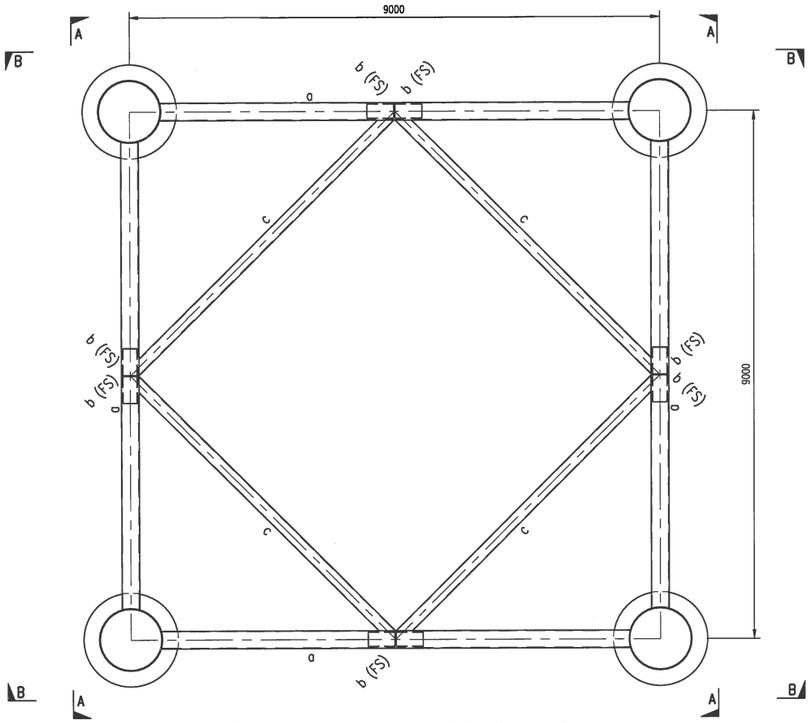

PONTOON SUPPORT FRAME TYPE A – PLAN

SCALE 1:50

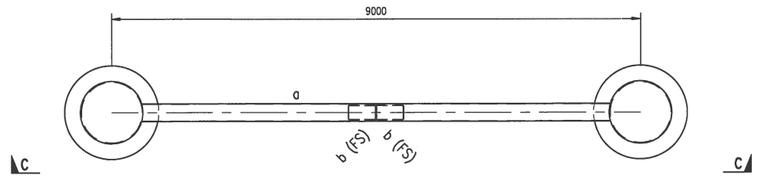

PONTOON SUPPORT FRAME TYPE B – PLAN

SCALE 1:50

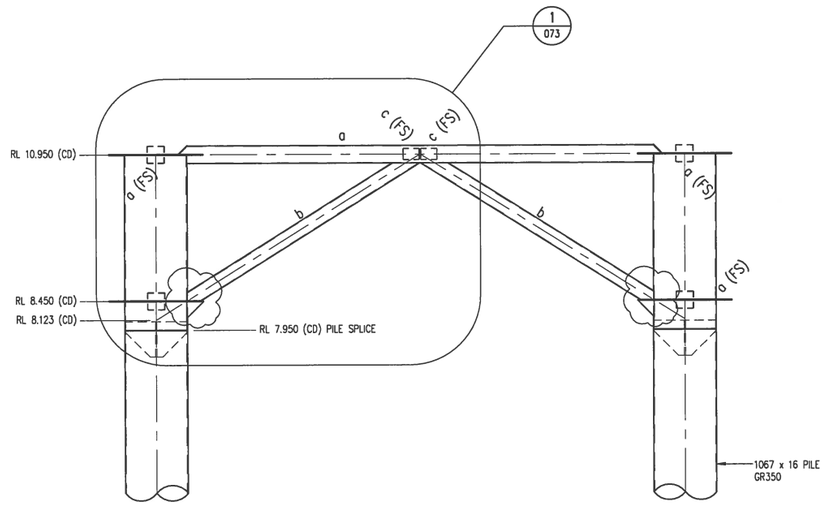

SECTION A–A

SCALE 1:50

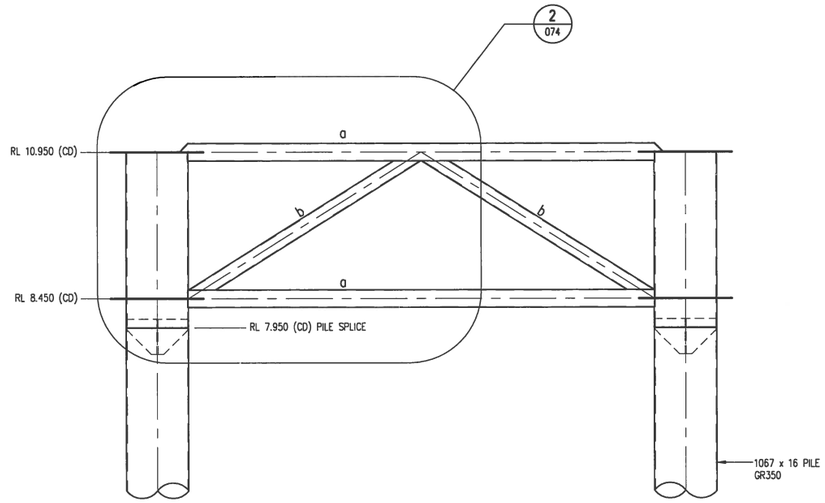

SECTION C–C

SCALE 1:50

SECTION B–B SIMILAR

COPYRIGHT
These drawings, plans and specifications and the copyright therein are the property of the Bonacci Group and must not be used, reproduced or copied wholly or in part without the written permission of the Bonacci Group. All rights reserved.

Issue	Revision	Date	By	App.
P5	ISSUED FOR PROCUREMENT	03.12.10	TKM	TJM
P4	PROGRESS ISSUE	16.11.10	TKM	TJM
P3	RE-ISSUED FOR PERMIT	03.11.10	TKM	TJM
P2	ISSUED FOR PERMIT	04.10.10	TKM	TJM
P1	PRELIMINARY ISSUE	17.09.10	TKM	TJM
1	ISSUED FOR CONSTRUCTION	01.02.11	TKM	TJM
0	ISSUED FOR CONSTRUCTION	22.12.10	TKM	TJM

Bonacci Group (Qld) Pty Ltd
ABN 72 010 964 664
Structural, Civil and Infrastructure Engineers
10 Finchley Street (PO Box 1299) Milton Queensland 4064 Australia
Tel : +61 7 3510 7222 Fax : +61 7 3368 1751
Email : bonq@bonaccigld.com
Web Site : www.bonaccigroup.com

Project
GLNG: MAINLAND FACILITIES
PORT CENTRAL

Drawing Title
400 PAX FERRY LANDING
PONTOON SUPPORT FRAMES
DETAILS – SHEET 1

BONACCI Project Ref	B3618	ISSUED FOR CONSTRUCTION	
Scale AS SHOWN	Designed DMK	Project Director Approved	Date
Date SEP 2010	Drawn TKM		
BECHTEL Doc No.	25577-100-V41-CM00-00022	072	Rev. 1
GLNG Base Doc No.	3310-BTH-3-3.3-96598-22		
GLNG Drawing Code	3310-40 -96598-22		

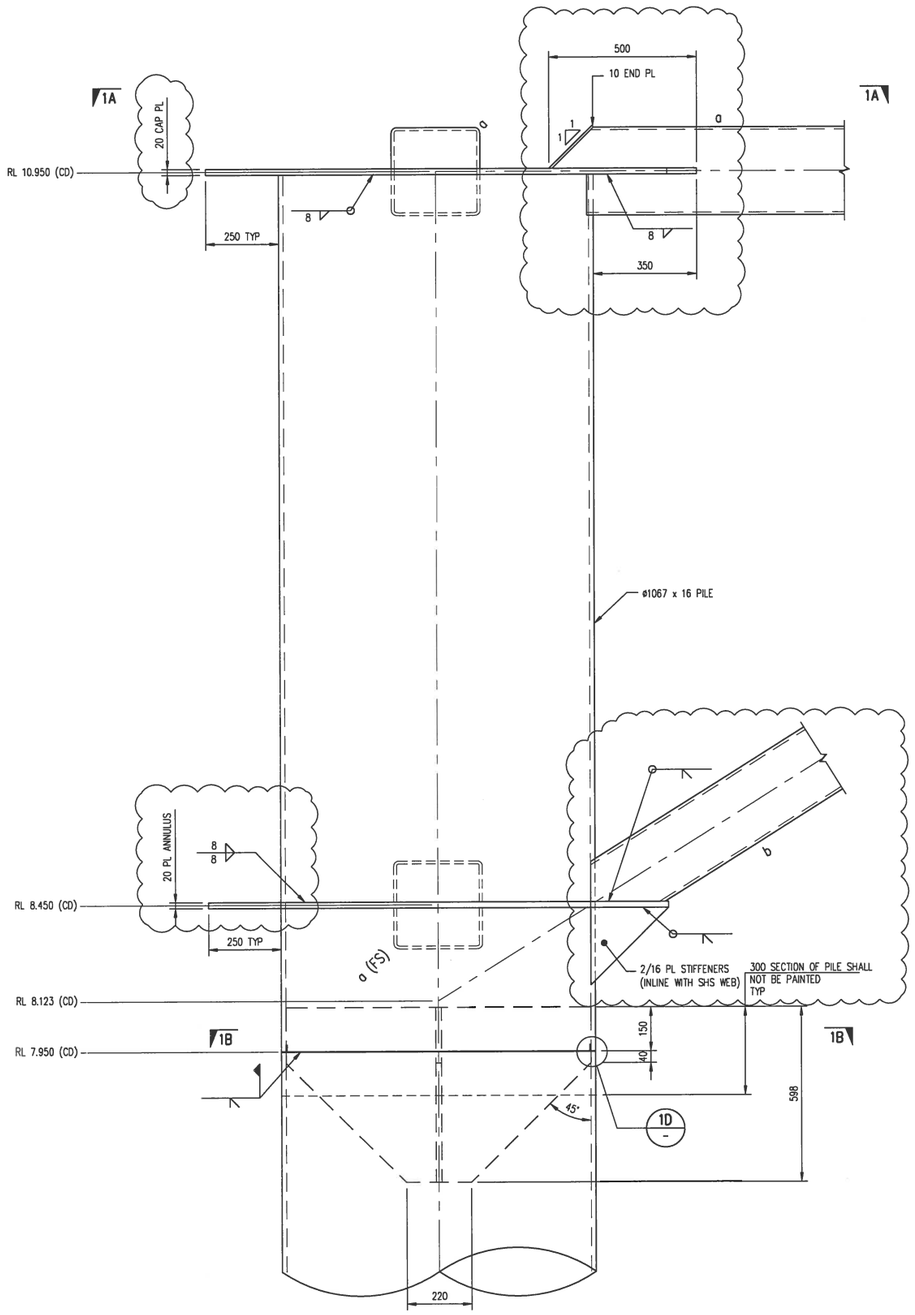

DETAIL 1/072
SCALE 1:10

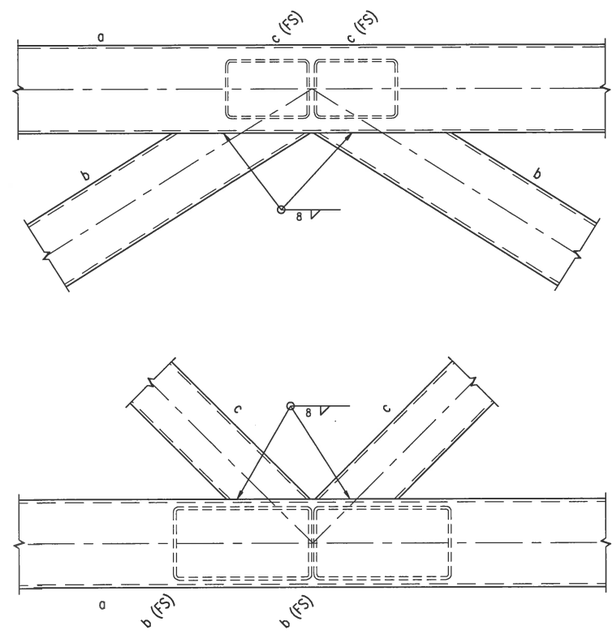

SECTION 1C-1C
SCALE 1:10

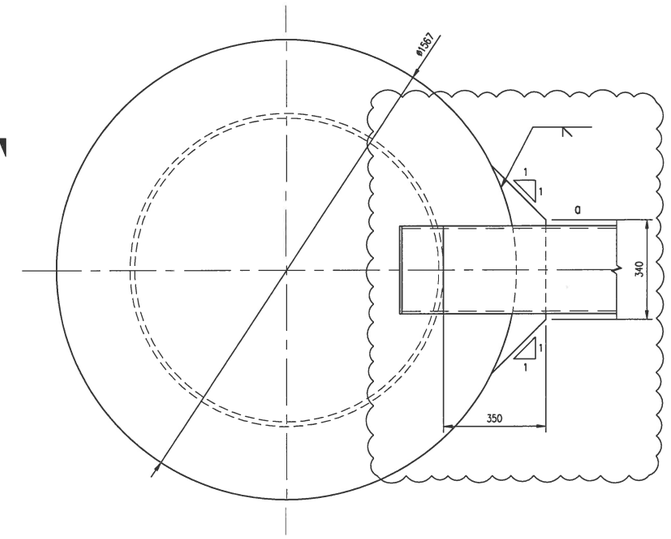

SECTION 1A-1A
SCALE 1:10

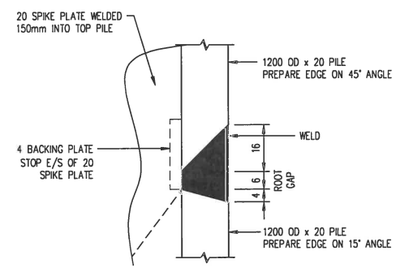

DETAIL 1D
SCALE 1:1

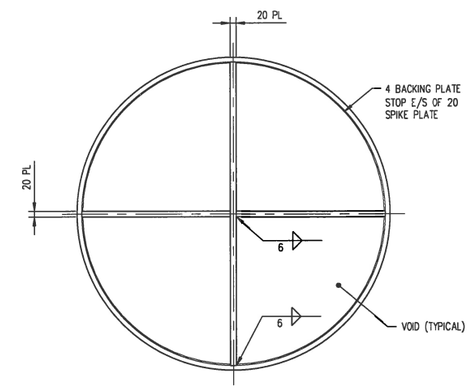

SECTION 1B-1B
SCALE 1:10

COPYRIGHT
All rights reserved.
These drawings, plans and specifications and the copyright therein are the property of the Bonacci Group and must not be used, reproduced or copied wholly or in part without the written permission of the Bonacci Group.

Issue	Revision	Date	By	App.
P5	ISSUED FOR PROCUREMENT	03.12.10	TKM	TJM
P4	PROGRESS ISSUE	16.11.10	TKM	TJM
P3	RE-ISSUED FOR PERMIT	03.11.10	TKM	TJM
P2	ISSUED FOR PERMIT	04.10.10	TKM	TJM
P1	PRELIMINARY ISSUE	17.09.10	TKM	TJM
1	ISSUED FOR CONSTRUCTION	01.02.11	TKM	TJM
0	ISSUED FOR CONSTRUCTION	22.12.10	TKM	TJM

GOLDING LNG BECHTEL

BONACCI
Bonacci Group (Qld) Pty Ltd
ABN 72 010 964 664
Structural, Civil and Infrastructure Engineers
10 Finchley Street (PO Box 1299) Milton Queensland 4064 Australia
Tel : +61 7 3510 7222 Fax : +61 7 3368 1751
Email : bonq@bonaccigroup.com
Web Site : www.bonaccigroup.com

Project
GLNG: MAINLAND FACILITIES
PORT CENTRAL
Drawing Title
400 PAX FERRY LANDING
PONTOON SUPPORT FRAMES
DETAILS - SHEET 2

BONACCI Project Ref	B3618	ISSUED FOR CONSTRUCTION	
Scale AS SHOWN	Designed DMK	Project Director Approved	Date
Date SEP 2010	Drawn TKM		
BECHTEL Doc No.	25577-100-V41-CM00-00023	073	Rev. 1
GLNG Base Doc No.	3310-BTH-3-3.3-96598-23		
GLNG Drawing Code	3310-40 -96598-23		

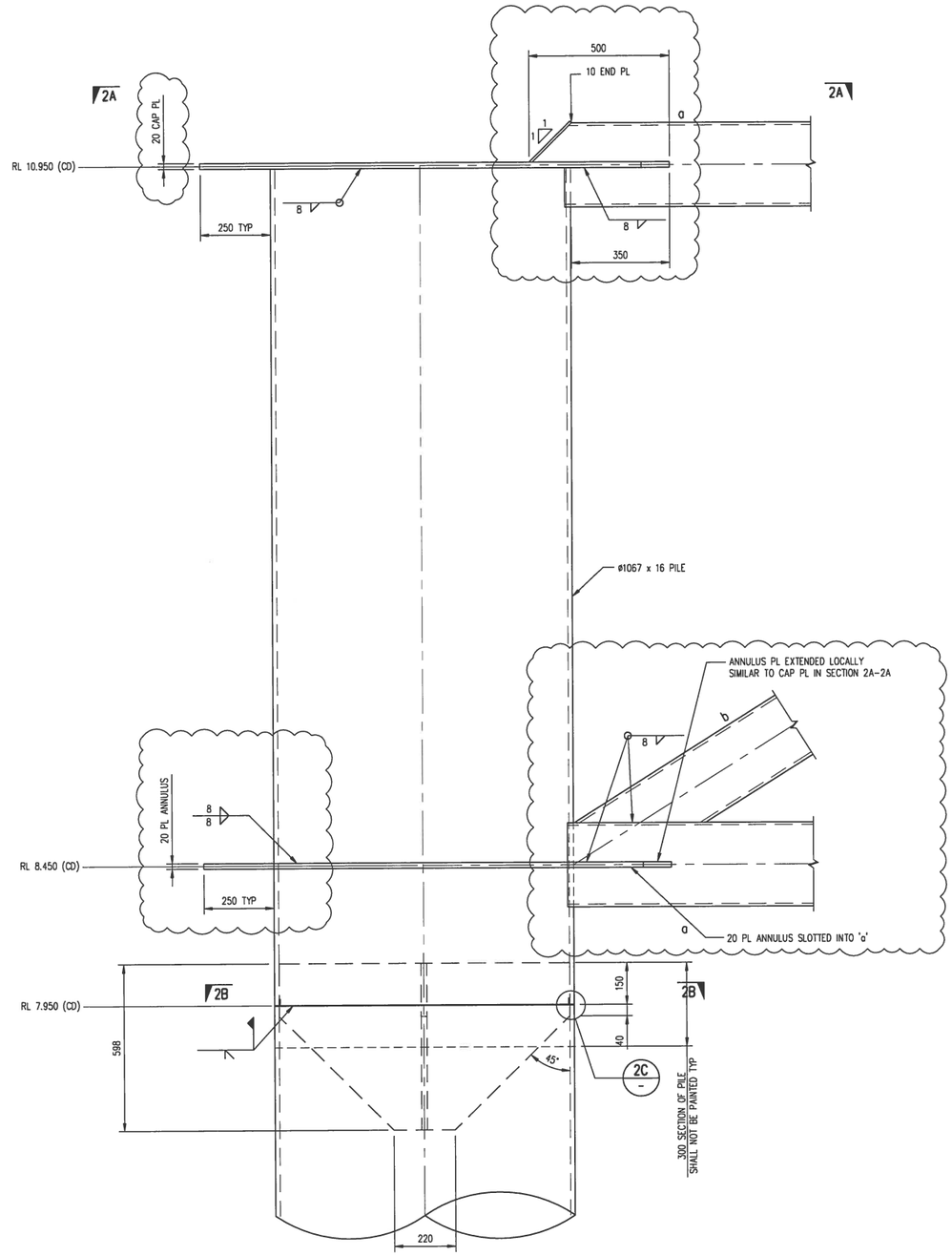

DETAIL 2/072

SCALE 1:10

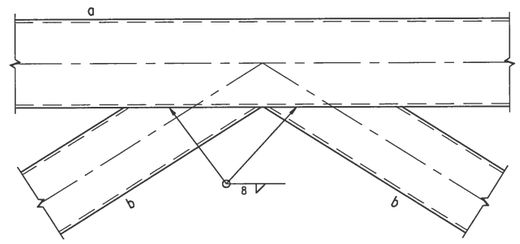

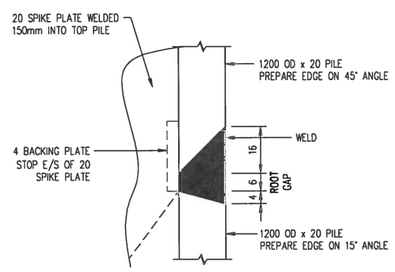

DETAIL 2C/–

SCALE 1:1

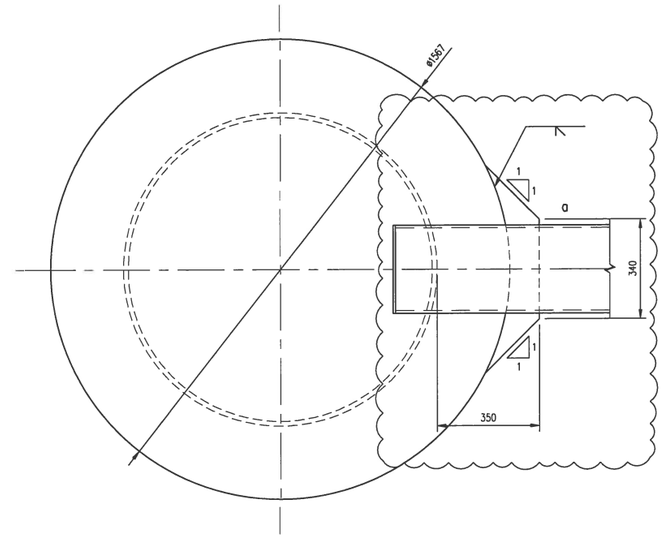

SECTION 2A–2A

SCALE 1:10

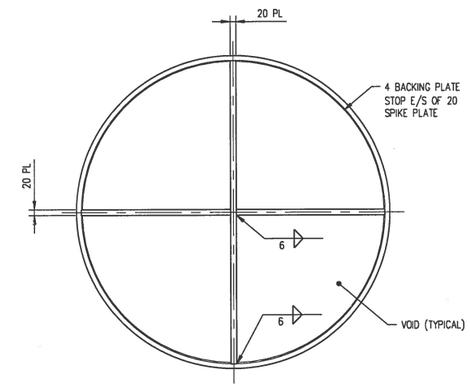

SECTION 2B–2B

SCALE 1:10

COPYRIGHT All rights reserved.
These drawings, plans and specifications and the copyright therein are the property of the Bonacci Group and must not be used, reproduced or copied wholly or in part without the written permission of the Bonacci Group.

Issue	Revision	Date	By	App.
0	ISSUED FOR CONSTRUCTION	22.12.10	TKM	TJM
P4	ISSUED FOR PROCUREMENT	03.12.10	TKM	TJM
P3	PROGRESS ISSUE	16.11.10	TKM	TJM
P2	RE-ISSUED FOR PERMIT	03.11.10	TKM	TJM
P1	ISSUED FOR PERMIT	04.10.10	TKM	TJM

Issue	Revision	Date	By	App.
1	ISSUED FOR CONSTRUCTION	01.02.11	TKM	TJM

Issue	Revision	Date	By	App.

Bonacci Group (Qld) Pty Ltd
ABN 72 010 964 664
Structural, Civil and Infrastructure Engineers
10 Finchley Street (PO Box 1299) Milton Queensland 4064 Australia
Tel : +61 7 3510 7222 Fax : +61 7 3368 1751
Email : bonq@bonaccigld.com
Web Site : www.bonaccigroup.com

Project
GLNG: MAINLAND FACILITIES
PORT CENTRAL

Drawing Title
400 PAX FERRY LANDING
PONTOON SUPPORT FRAMES
DETAILS - SHEET 3

BONACCI Project Ref	B3618
Scale	AS SHOWN
Date	SEP 2010
Designed	DMK
Drawn	TKM
Project Director Approved	
Date	
BECHTEL Doc No.	25577-100-V41-CM00-00024
GLNG Base Doc No.	3310-BTH-3-3.3-96598-24
GLNG Drawing Code	3310-40 -96598-24

ISSUED FOR CONSTRUCTION

074

Rev. 1

REFERENCE SCALE BAR ONLY – DO NOT SCALE DRAWING CONTENT

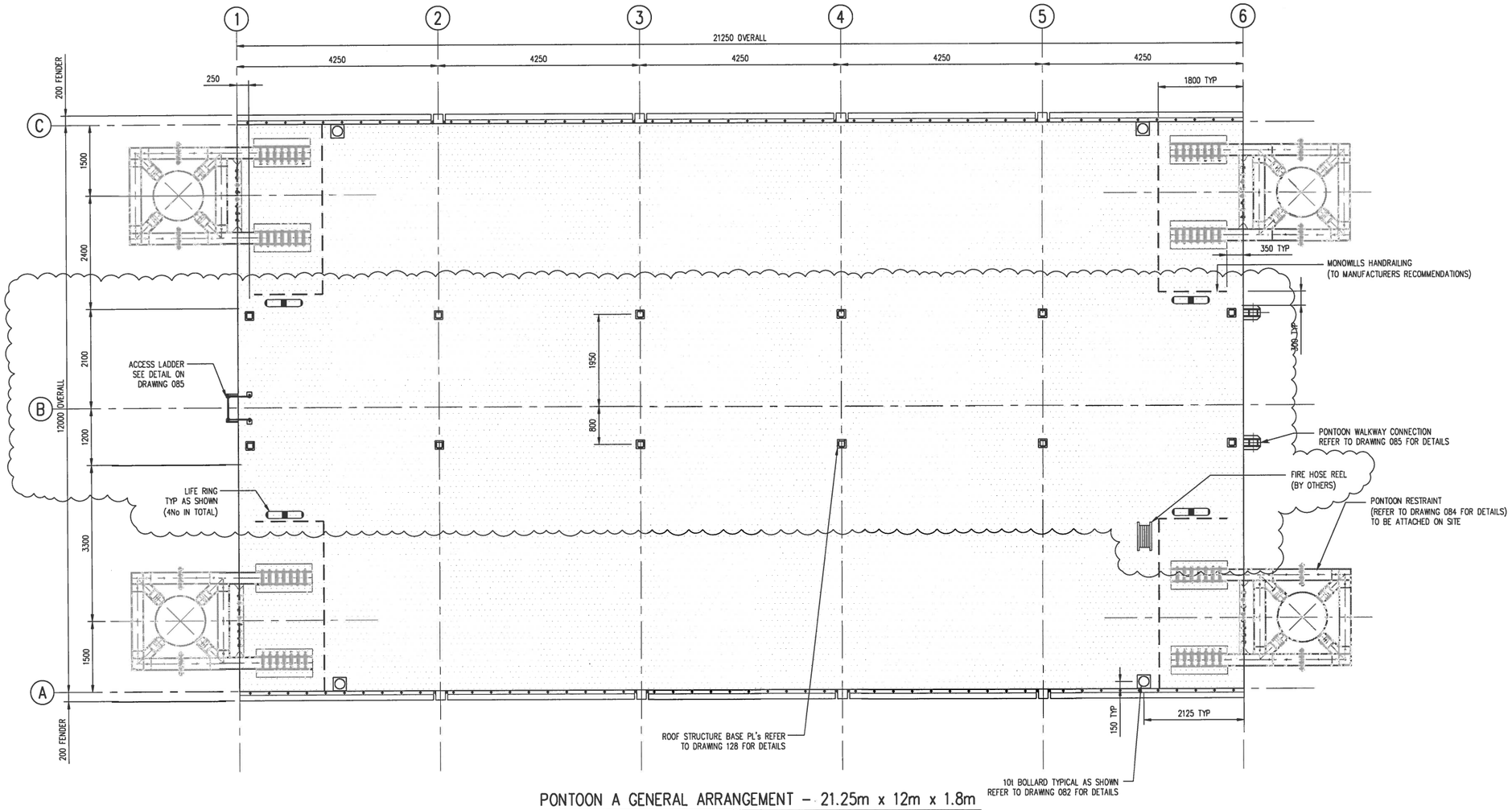

PONTOON A GENERAL ARRANGEMENT – 21.25m x 12m x 1.8m

SCALE 1:50

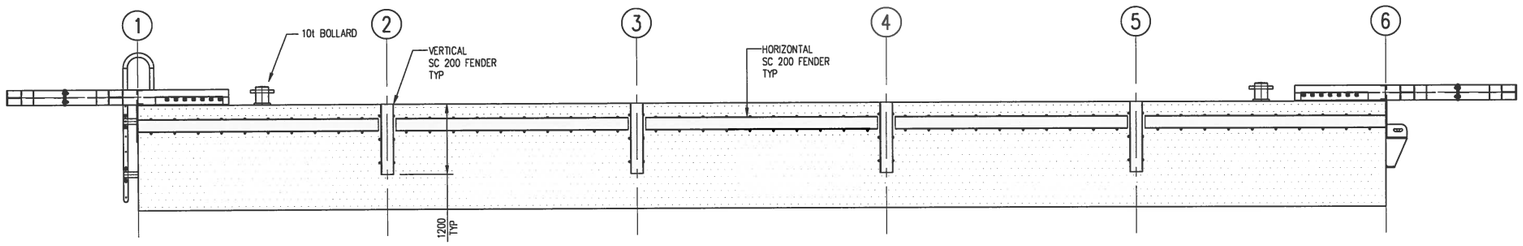

TYPICAL SIDE ELEVATION

SCALE 1:50

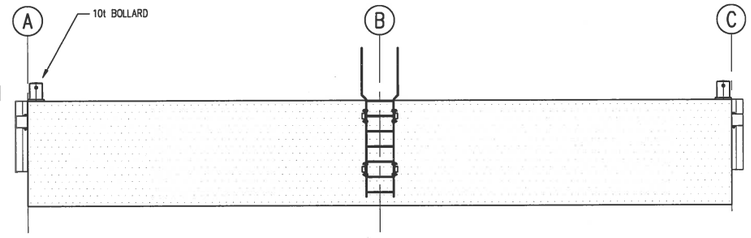

TYPICAL END ELEVATION

SCALE 1:50

COPYRIGHT All rights reserved.
These drawings, plans and specifications and the copyright therein are the property of the Bonacci Group and must not be used, reproduced or copied wholly or in part without the written permission of the Bonacci Group.

Issue	Revision	Date	By	App.
0	ISSUED FOR CONSTRUCTION	22.12.10	TKM	TJM
P4	ISSUED FOR PROCUREMENT	03.12.10	TKM	TJM
P3	PROGRESS ISSUE	16.11.10	TKM	TJM
P2	RE-ISSUED FOR PERMIT	03.11.10	TKM	TJM
P1	ISSUED FOR PERMIT	04.10.10	TKM	TJM
2	ISSUED FOR CONSTRUCTION	08.04.11	TKM	TJM
1	ISSUED FOR CONSTRUCTION	01.02.11	TKM	TJM

Bonacci Group (Qld) Pty Ltd
ABN 72 010 964 664
Structural, Civil and Infrastructure Engineers
10 Finchley Street (PO Box 1299) Milton Queensland 4064 Australia
Tel : +61 7 3510 7222 Fax : +61 7 3368 1751
Email : bonq@bonaccigld.com
Web Site : www.bonaccigroup.com

Project
GLNG: MAINLAND FACILITIES
PORT CENTRAL

Drawing Title
400 PAX FERRY LANDING
PONTOON A
GENERAL ARRANGEMENT

BONACCI Project Ref B3618	ISSUED FOR CONSTRUCTION		
Scale AS SHOWN	Designed DMK	Project Director Approved	Date
Date SEP 2010	Drawn TKM		
BECHTEL Doc No.	25577-100-V41-CM00-00025	076	Rev. 2
GLNG Base Doc No.	3310-BTH-3-3.3-96598-25		
GLNG Drawing Code	3310-40 -96598-25		

REFERENCE SCALE BAR ONLY – DO NOT SCALE DRAWING CONTENT

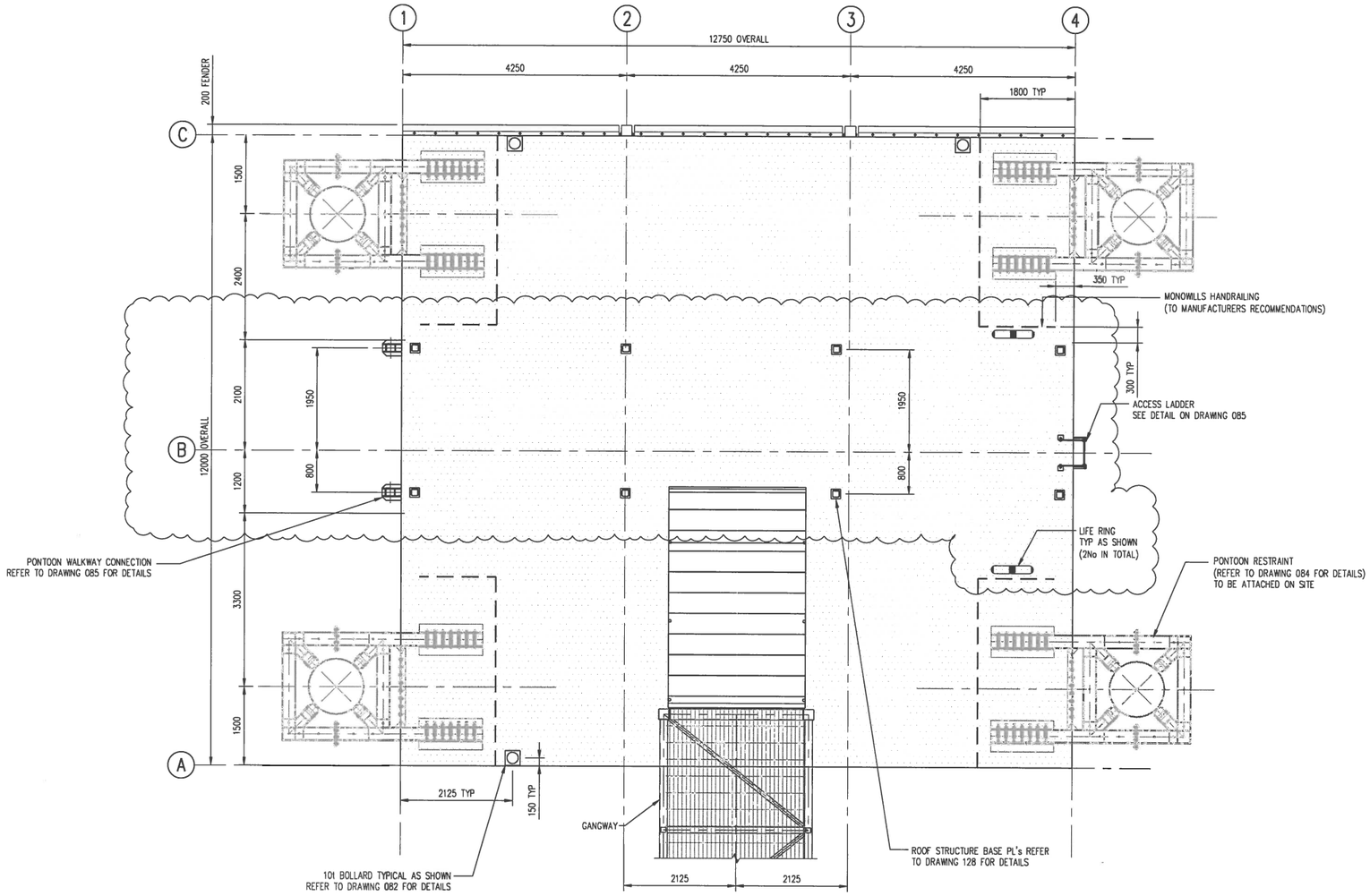

PONTOON B GENERAL ARRANGEMENT – 12.75m x 12m x 1.8m

SCALE 1:50

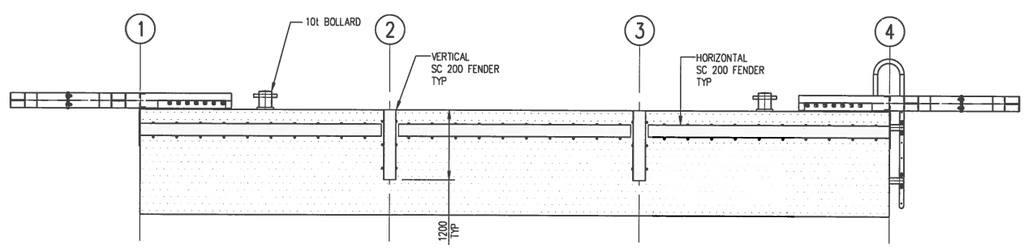

SEAWARD SIDE ELEVATION

SCALE 1:50

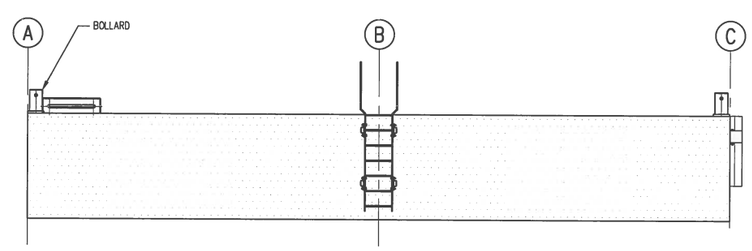

TYPICAL END ELEVATION

SCALE 1:50

COPYRIGHT All rights reserved.
These drawings, plans and specifications and the copyright therein are the property of the Bonacci Group and must not be used, reproduced or copied wholly or in part without the written permission of the Bonacci Group.

Issue	Revision	Date	By	App.
0	ISSUED FOR CONSTRUCTION	22.12.10	TKM	TJM
P4	ISSUED FOR PROCUREMENT	03.12.10	TKM	TJM
P3	PROGRESS ISSUE	16.11.10	TKM	TJM
P2	RE-ISSUED FOR PERMIT	03.11.10	TKM	TJM
P1	ISSUED FOR PERMIT	04.10.10	TKM	TJM
2	ISSUED FOR CONSTRUCTION	08.04.11	TKM	TJM
1	ISSUED FOR CONSTRUCTION	01.02.11	TKM	TJM

GOLDING LNG BECHTEL

BONACCI
Bonacci Group (Qld) Pty Ltd
ABN 72 010 964 664
Structural, Civil and Infrastructure Engineers
10 Finchley Street (PO Box 1299) Milton Queensland 4064 Australia
Tel : +61 7 3510 7222 Fax : +61 7 3368 1751
Email : bong@bonaccigld.com
Web Site : www.bonaccigroup.com

Project
GLNG: MAINLAND FACILITIES
PORT CENTRAL
Drawing Title
400 PAX FERRY LANDING
PONTOON B
GENERAL ARRANGEMENT

BONACCI Project Ref	B3618	ISSUED FOR CONSTRUCTION	
Scale AS SHOWN	Designed DMK	Project Director Approved	Date
Date SEP 2010	Drawn TKM		
BECHTEL Doc No.	25577-100-V41-CM00-00026	077	Rev. 2
GLNG Base Doc No.	3310-BTH-3-3.3-96598-26		
GLNG Drawing Code	3310-40 -96598-26		

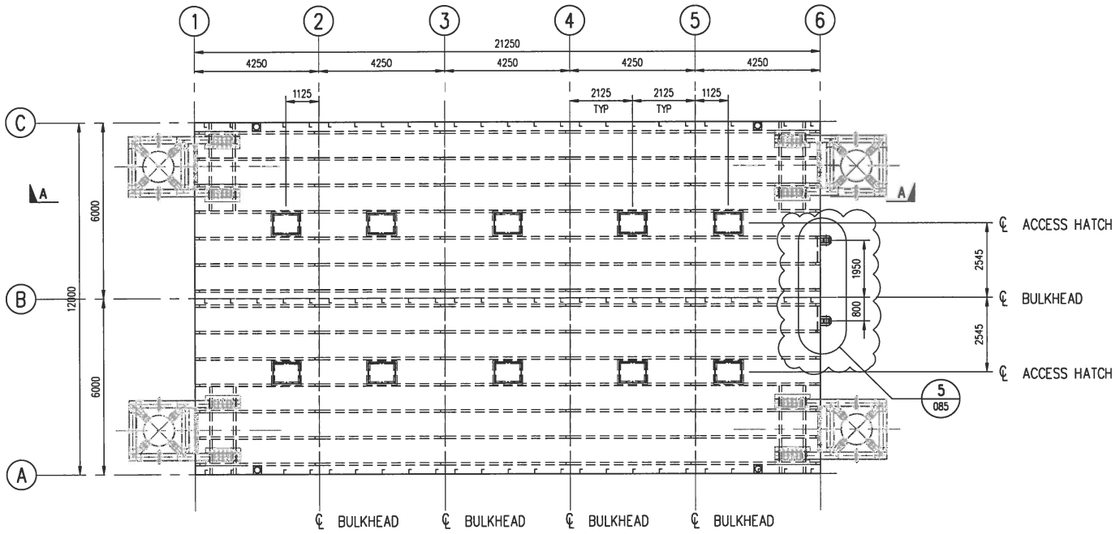

PLAN AT DECK LEVEL

SCALE 1:100

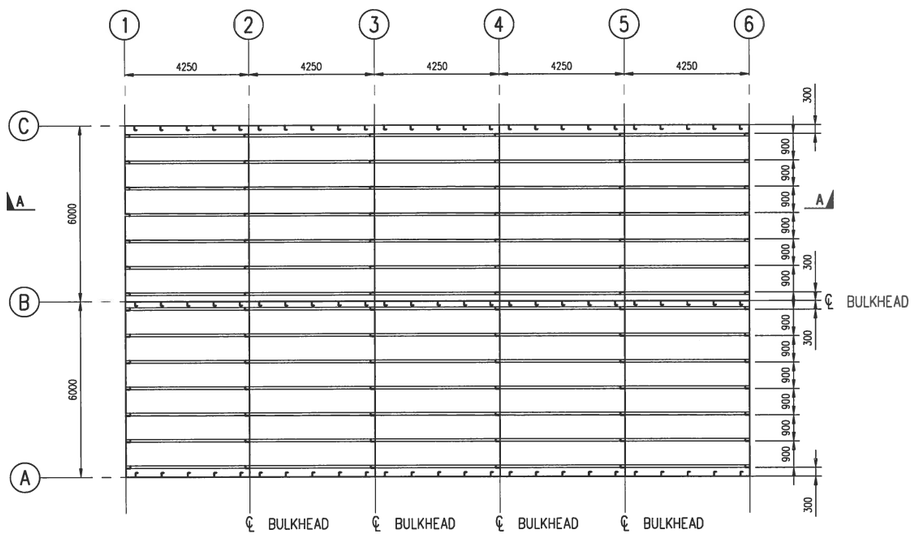

PLAN AT KEEL LEVEL

SCALE 1:100

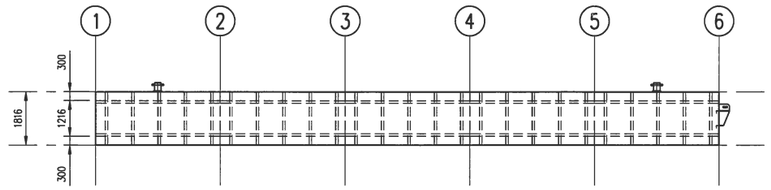

ELEVATION ON GRID A

SCALE 1:100

(GRIDS C SIMILAR)

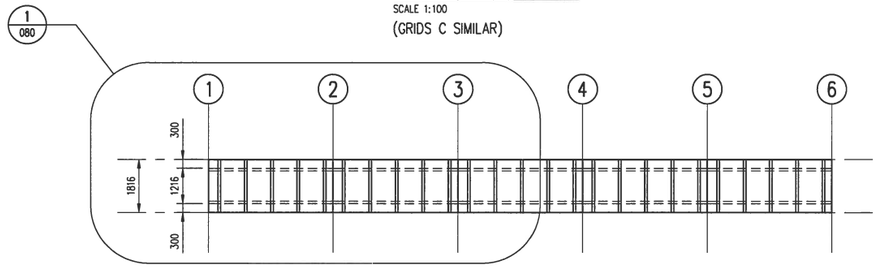

SECTION ON GRID B

SCALE 1:100

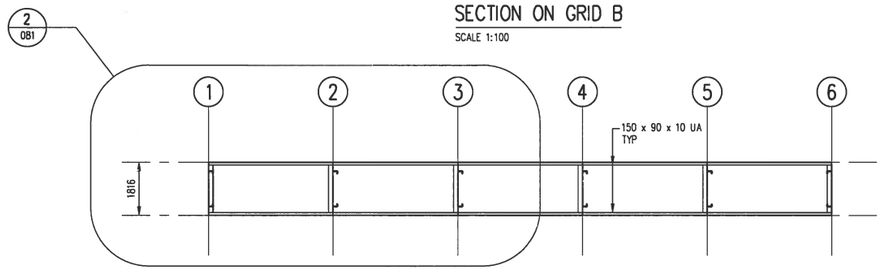

SECTION A-A

SCALE 1:100

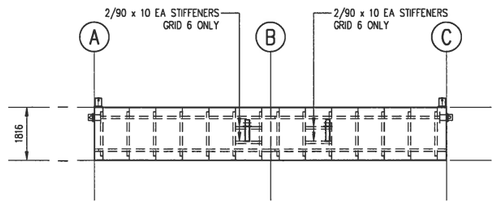

ELEVATION ON GRID 1

SCALE 1:100

(GRID 6 SIMILAR)

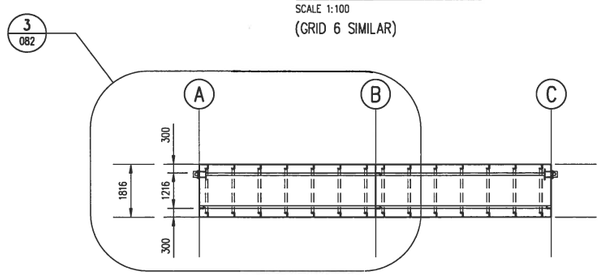

ELEVATION ON GRID 2, 3, 4 & 5

SCALE 1:100

NOTE:
1. NO BALLAST IS REQUIRED FOR PONTOON A
2. SACRIFICIAL ZINC ANODES TO BE INSTALLED ON BARGE HULL. DESIGN AND SUPPLY BY OTHERS

COPYRIGHT All rights reserved.
These drawings, plans and specifications and the copyright therein are the property of the Bonacci Group and must not be used, reproduced or copied wholly or in part without the written permission of the Bonacci Group.

Issue	Revision	Date	By	App.
0	ISSUED FOR CONSTRUCTION	22.12.10	TKM	TJM
P4	ISSUED FOR PROCUREMENT	03.12.10	TKM	TJM
P3	PROGRESS ISSUE	16.11.10	TKM	TJM
P2	RE-ISSUED FOR PERMIT	03.11.10	TKM	TJM
P1	ISSUED FOR PERMIT	04.10.10	TKM	TJM
2	ISSUED FOR CONSTRUCTION	08.04.11	TKM	TJM
1	ISSUED FOR CONSTRUCTION	01.02.11	TKM	TJM

Bonacci Group (Qld) Pty Ltd
ABN 72 010 964 664
Structural, Civil and Infrastructure Engineers
10 Finchley Street (PO Box 1299) Milton Queensland 4064 Australia
Tel : +61 7 3510 7222 Fax : +61 7 3368 1751
Email : bonq@bonaccigroup.com
Web Site : www.bonaccigroup.com

Project
GLNG: MAINLAND FACILITIES
PORT CENTRAL

Drawing Title
400 PAX FERRY LANDING
PONTOON A
FRAMING SETOUT

BONACCI Project Ref	B3618	ISSUED FOR CONSTRUCTION	
Scale AS SHOWN	Designed DMK	Project Director Approved	Date
Date SEP 2010	Drawn TKM		
BECHTEL Doc No.	25577-100-V41-CM00-00027	078	Rev. 2
GLNG Base Doc No.	3310-BTH-3-3.3-96598-27		
GLNG Drawing Code	3310-40 -96598-27		

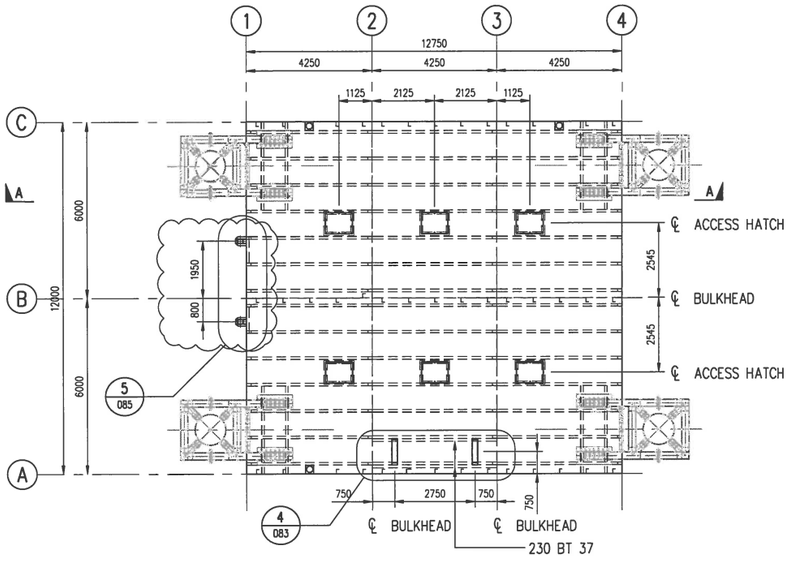

PLAN AT DECK LEVEL

SCALE 1:100

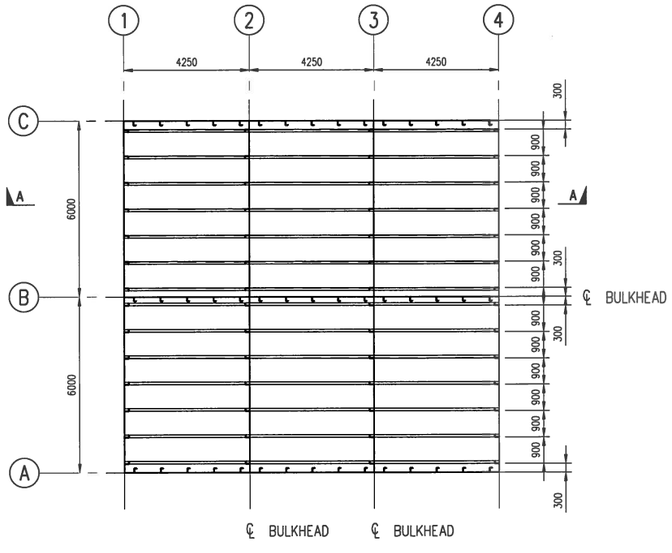

PLAN AT KEEL LEVEL

SCALE 1:100

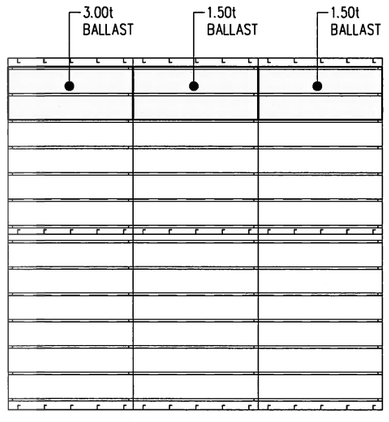

BALLAST PLAN

SCALE 1:100

NOTE:

1. ALL BALLAST TO BE MADE UP WITH CLAY PAVERS (TYPICAL)
2. SACRIFICIAL ZINC ANODES TO BE INSTALLED ON BARGE HULL. DESIGN AND SUPPLY BY OTHERS

REFERENCE SCALE BAR ONLY – DO NOT SCALE DRAWING CONTENT

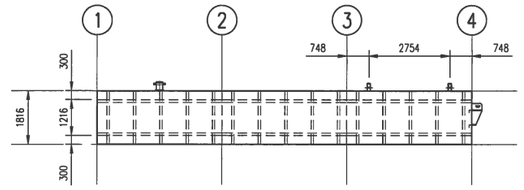

ELEVATION ON GRID A

SCALE 1:100

(GRIDS C SIMILAR)

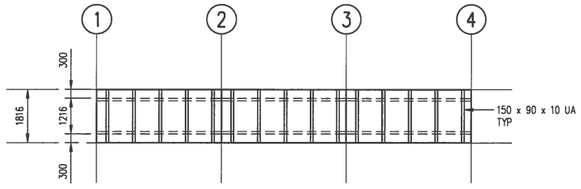

SECTION ON GRID B

SCALE 1:100

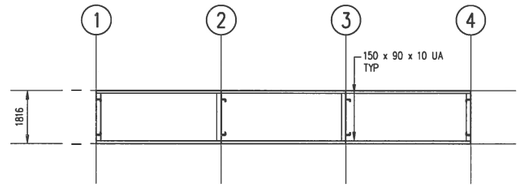

SECTION A–A

SCALE 1:100

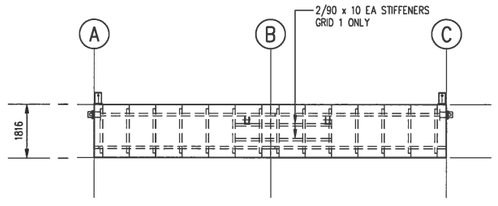

ELEVATION ON GRID 1

SCALE 1:100

(GRID 6 SIMILAR)

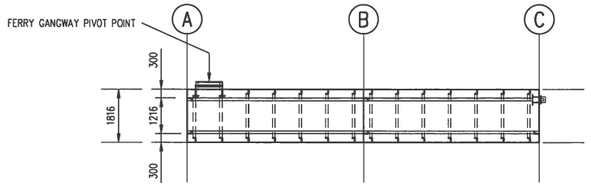

ELEVATION ON GRID 2, 3, 4 & 5

SCALE 1:100

COPYRIGHT
All rights reserved.
These drawings, plans and specifications and the copyright therein are the property of the Bonacci Group and must not be used, reproduced or copied wholly or in part without the written permission of the Bonacci Group.

Issue	Revision	Date	By	App.
0	ISSUED FOR CONSTRUCTION	22.12.10	TKM	TJM
P4	ISSUED FOR PROCUREMENT	03.12.10	TKM	TJM
P3	PROGRESS ISSUE	16.11.10	TKM	TJM
P2	RE-ISSUED FOR PERMIT	03.11.10	TKM	TJM
P1	ISSUED FOR PERMIT	04.10.10	TKM	TJM
2	ISSUED FOR CONSTRUCTION	08.04.11	TKM	TJM
1	ISSUED FOR CONSTRUCTION	01.02.11	TKM	TJM

GOLDING

LNG

BECHTEL

BONACCI

Bonacci Group (Qld) Pty Ltd
ABN 72 010 964 664
Structural, Civil and Infrastructure Engineers
10 Finchley Street (PO Box 1299) Milton Queensland 4064 Australia
Tel : +61 7 3510 7222 Fax : +61 7 3368 1751
Email : bonq@bonaccigld.com
Web Site : www.bonaccigroup.com

Project
GLNG: MAINLAND FACILITIES
PORT CENTRAL

Drawing Title
400 PAX FERRY LANDING
PONTOON B
FRAMING SETOUT

BONACCI Project Ref B3618	ISSUED FOR CONSTRUCTION		
Scale AS SHOWN	Designed DMK	Project Director Approved	Date
Date SEP 2010	Drawn TKM		
BECHTEL Doc No.	25577-100-V41-CM00-00028	079	Rev. 2
GLNG Base Doc No.	3310-BTH-3-3.3-96598-28		
GLNG Drawing Code	3310-40 -96598-28		

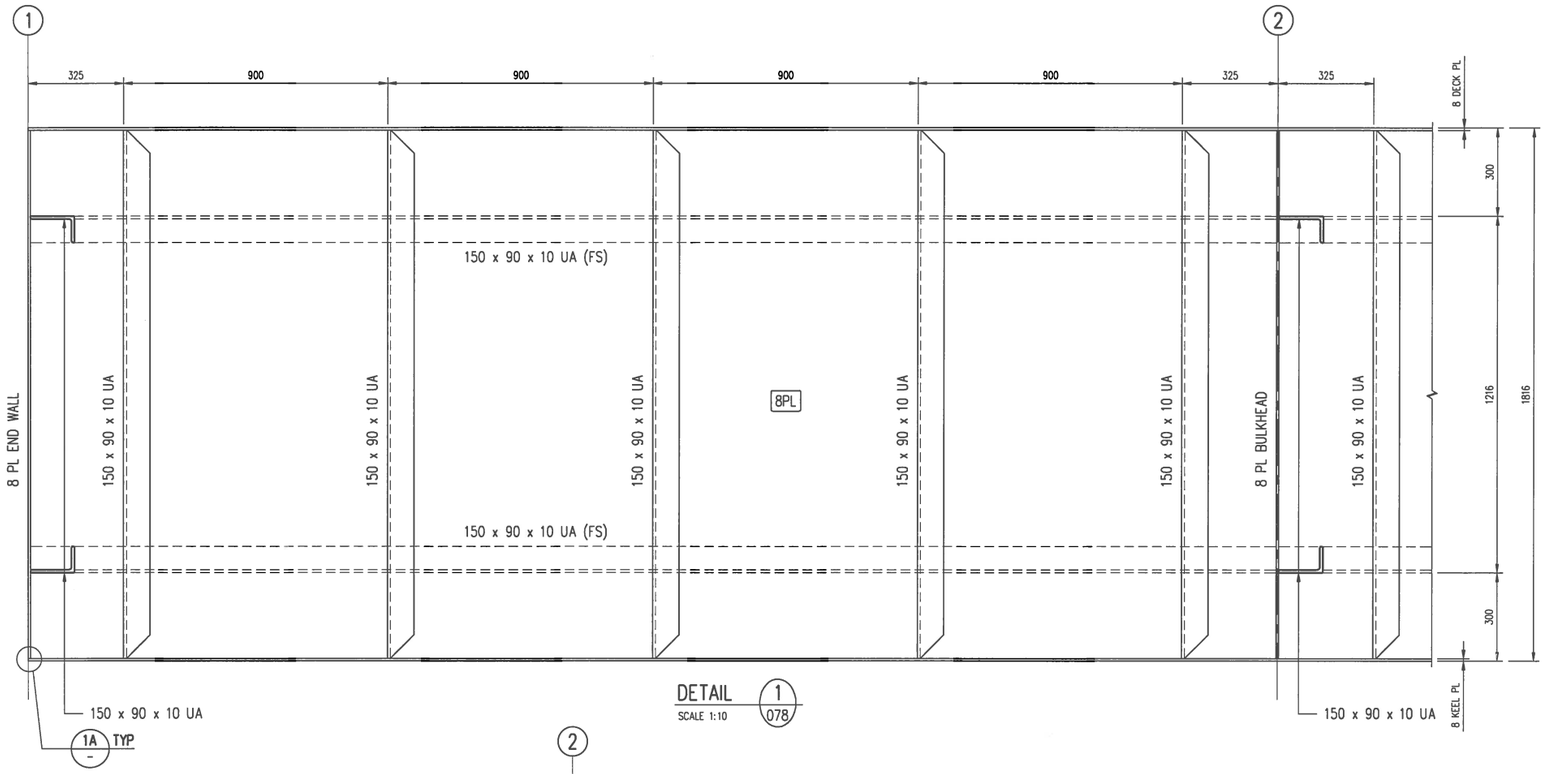

DETAIL 1/078
SCALE 1:10

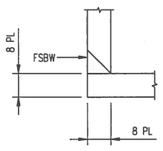

DETAIL 1A/–
SCALE 1:1

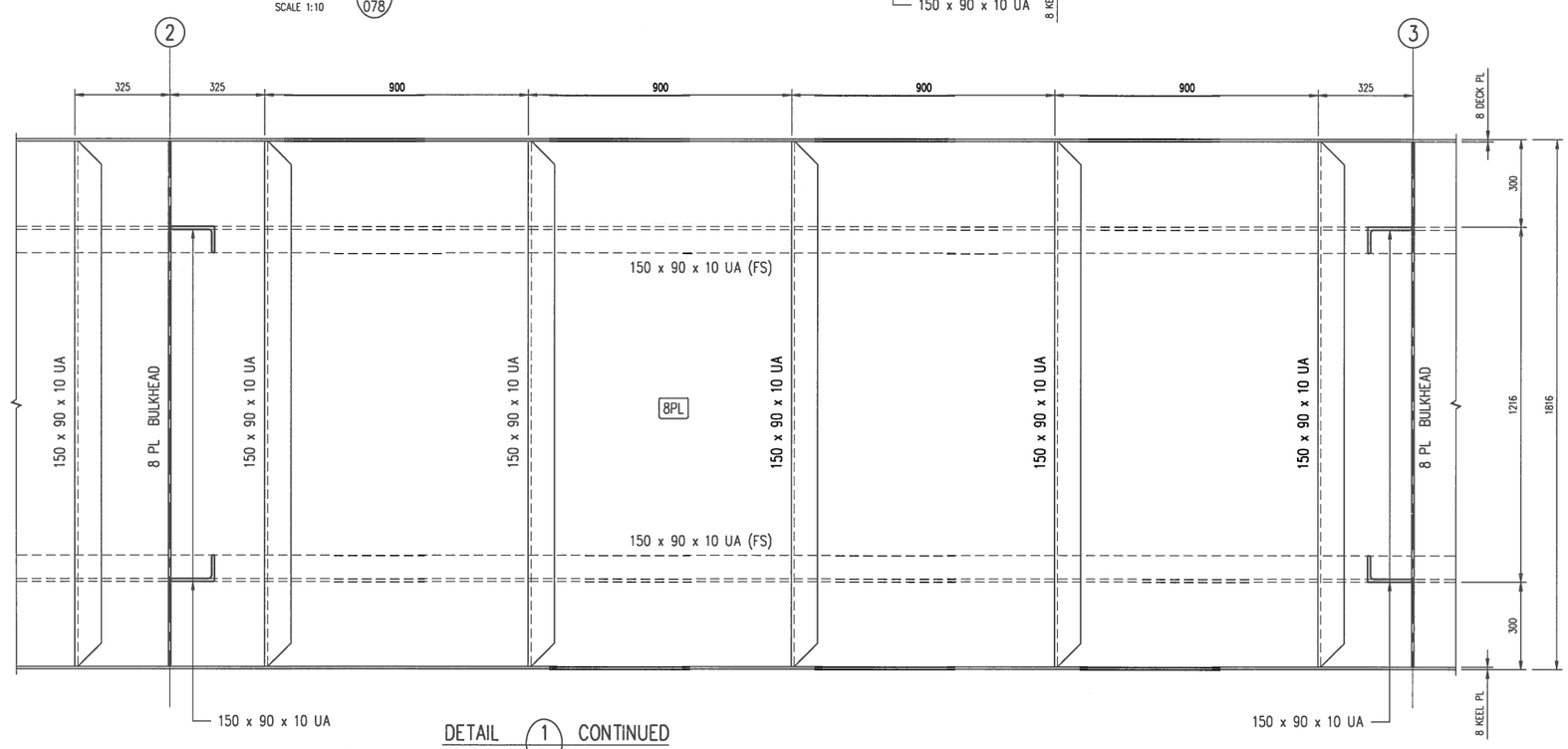

DETAIL 1/078 CONTINUED
SCALE 1:10

COPYRIGHT All rights reserved.
These drawings, plans and specifications and the copyright therein are the property of the Bonacci Group and must not be used, reproduced or copied wholly or in part without the written permission of the Bonacci Group.

Issue	Revision	Date	By	App.
0	ISSUED FOR CONSTRUCTION	22.12.10	TKM	TJM
P4	ISSUED FOR PROCUREMENT	03.12.10	TKM	TJM
P3	PROGRESS ISSUE	16.11.10	TKM	TJM
P2	RE-ISSUED FOR PERMIT	03.11.10	TKM	TJM
P1	ISSUED FOR PERMIT	04.10.10	TKM	TJM
1	ISSUED FOR CONSTRUCTION	01.02.11	TKM	TJM

Bonacci Group (Qld) Pty Ltd
ABN 72 010 964 664
Structural, Civil and Infrastructure Engineers
10 Finchley Street (PO Box 1299) Milton Queensland 4064 Australia
Tel : +61 7 3510 7222 Fax : +61 7 3368 1751
Email : bonq@bonaccigld.com
Web Site : www.bonaccigroup.com

Project
GLNG: MAINLAND FACILITIES
PORT CENTRAL
Drawing Title
400 PAX FERRY LANDING
PONTOON FRAMING DETAILS
SHEET 1

BONACCI Project Ref
B3618
Scale AS SHOWN
Date SEP 2010
Designed DMK
Drawn TKM
Project Director Approved
Date

ISSUED FOR CONSTRUCTION

BECHTEL Doc No.	25577-100-V41-CM00-00029
GLNG Base Doc No.	3310-BTH-3-3.3-96598-29
GLNG Drawing Code	3310-40 -96598-29

080

Rev. 1

REFERENCE SCALE BAR ONLY – DO NOT SCALE DRAWING CONTENT

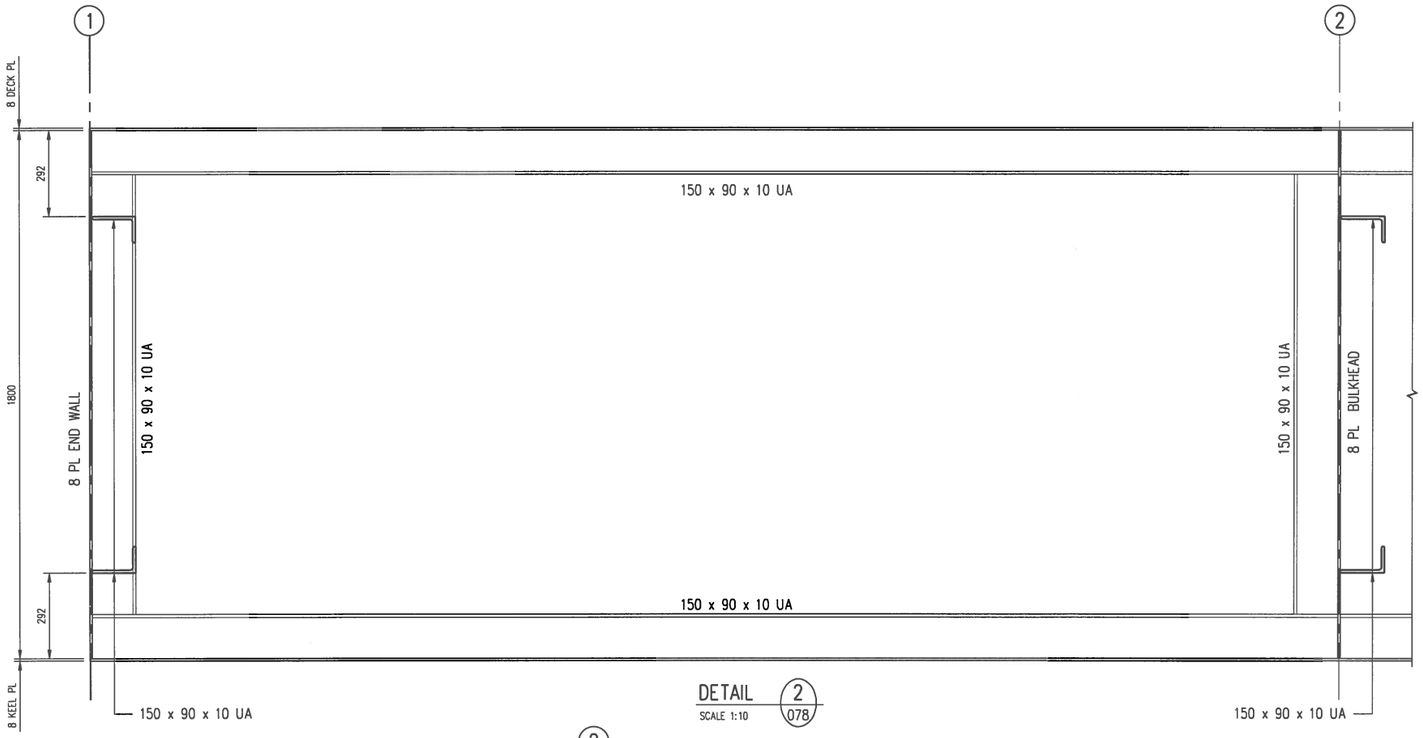

DETAIL 2/078
SCALE 1:10

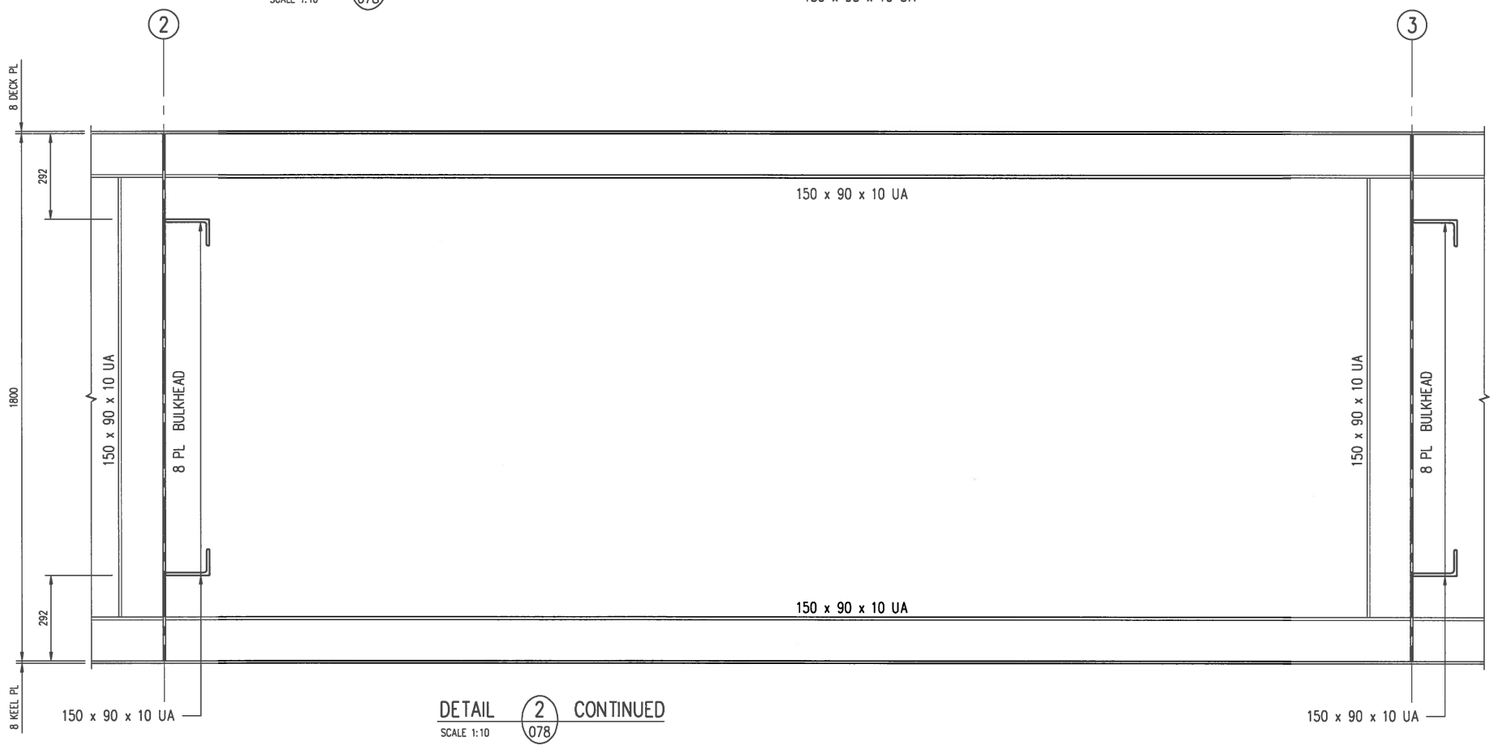

DETAIL 2/078 CONTINUED
SCALE 1:10

COPYRIGHT
All rights reserved.
These drawings, plans and specifications and the copyright therein are the property of the Bonacci Group and must not be used, reproduced or copied wholly or in part without the written permission of the Bonacci Group.

Issue	Revision	Date	By	App.
0	ISSUED FOR CONSTRUCTION	22.12.10	TKM	TJM
P4	ISSUED FOR PROCUREMENT	03.12.10	TKM	TJM
P3	PROGRESS ISSUE	16.11.10	TKM	TJM
P2	RE-ISSUED FOR PERMIT	03.11.10	TKM	TJM
P1	ISSUED FOR PERMIT	04.10.10	TKM	TJM
1	ISSUED FOR CONSTRUCTION	01.02.11	TKM	TJM

Bonacci Group (Qld) Pty Ltd
ABN 72 010 964 664
Structural, Civil and Infrastructure Engineers
10 Finchley Street (PO Box 1299) Milton Queensland 4064 Australia
Tel : +61 7 3510 7222 Fax : +61 7 3368 1751
Email : bonq@bonaccigld.com
Web Site : www.bonaccigroup.com

Project
GLNG: MAINLAND FACILITIES
PORT CENTRAL

Drawing Title
400 PAX FERRY LANDING
PONTOON FRAMING DETAILS
SHEET 2

BONACCI Project Ref B3618	ISSUED FOR CONSTRUCTION		
Scale AS SHOWN	Designed DMK	Project Director Approved	Date
Date SEP 2010	Drawn TKM		
BECHTEL Doc No.	25577-100-V41-CM00-00030	081	Rev. 1
GLNG Base Doc No.	3310-BTH-3-3.3-96598-30		
GLNG Drawing Code	3310-40 -96598-30		

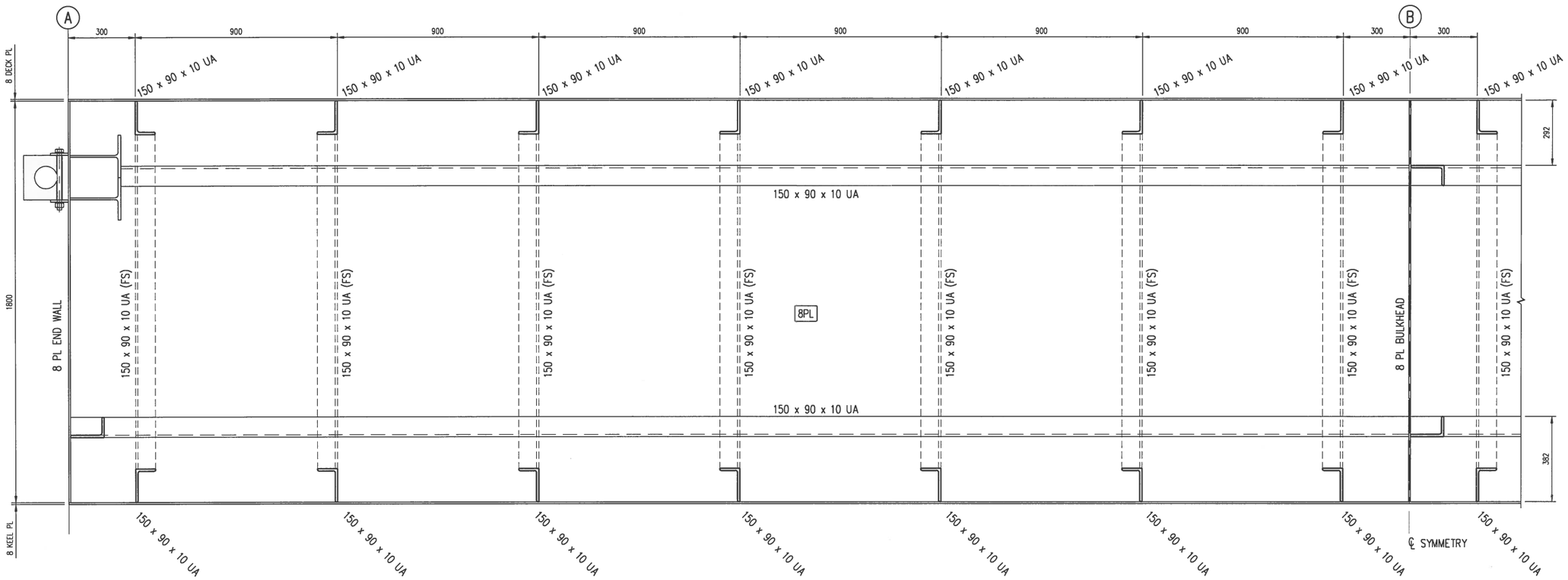

DETAIL 3 / 078
SCALE 1:10

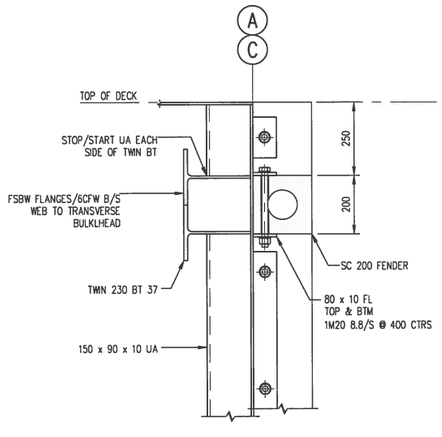

TYPICAL FENDER DETAIL
SCALE 1:10

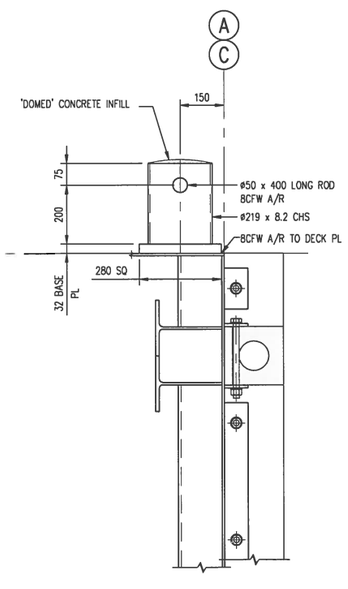

TYPICAL BOLLARD DETAIL
SCALE 1:10

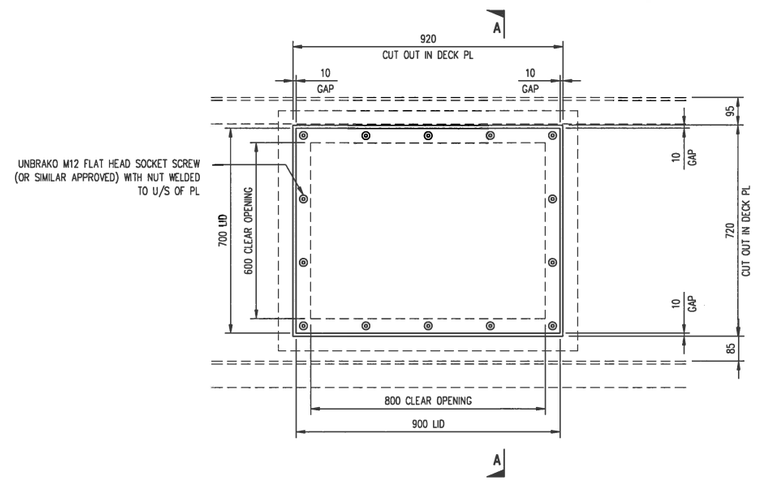

TYPICAL ACCESS HATCH DETAIL
SCALE 1:10

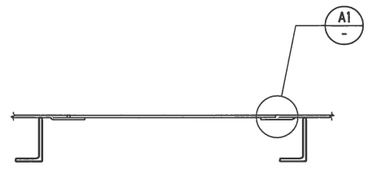

SECTION A-A
SCALE 1:10

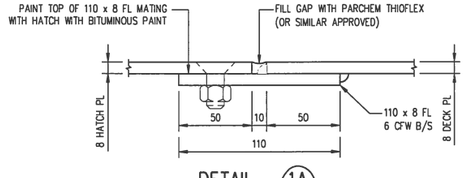

DETAIL 1A / -
SCALE 1:2

COPYRIGHT All rights reserved.
These drawings, plans and specifications and the copyright therein are the property of the Bonacci Group and must not be used, reproduced or copied wholly or in part without the written permission of the Bonacci Group.

Issue	Revision	Date	By	App.
0	ISSUED FOR CONSTRUCTION	22.12.10	TKM	TJM
P4	ISSUED FOR PROCUREMENT	03.12.10	TKM	TJM
P3	PROGRESS ISSUE	16.11.10	TKM	TJM
P2	RE-ISSUED FOR PERMIT	03.11.10	TKM	TJM
P1	ISSUED FOR PERMIT	04.10.10	TKM	TJM
1	ISSUED FOR CONSTRUCTION	01.02.11	TKM	TJM

Bonacci Group (Qld) Pty Ltd
ABN 72 010 954 664
Structural, Civil and Infrastructure Engineers
10 Finchley Street (PO Box 1299) Milton Queensland 4064 Australia
Tel : +61 7 3510 7222 Fax : +61 7 3368 1751
Email : bonq@bonaccigld.com
Web Site : www.bonaccigroup.com

Project
GLNG: MAINLAND FACILITIES
PORT CENTRAL
Drawing Title
400 PAX FERRY LANDING
PONTOON FRAMING DETAILS
SHEET 3

BONACCI Project Ref B3618	ISSUED FOR CONSTRUCTION		
Scale AS SHOWN	Designed DMK	Project Director Approved	Date
Date SEP 2010	Drawn TKM		
BECHTEL Doc No.	25577-100-V41-CM00-00031	082	Rev. 1
GLNG Base Doc No.	3310-BTH-3-3.3-96598-31		
GLNG Drawing Code	3310-40 -96598-31		

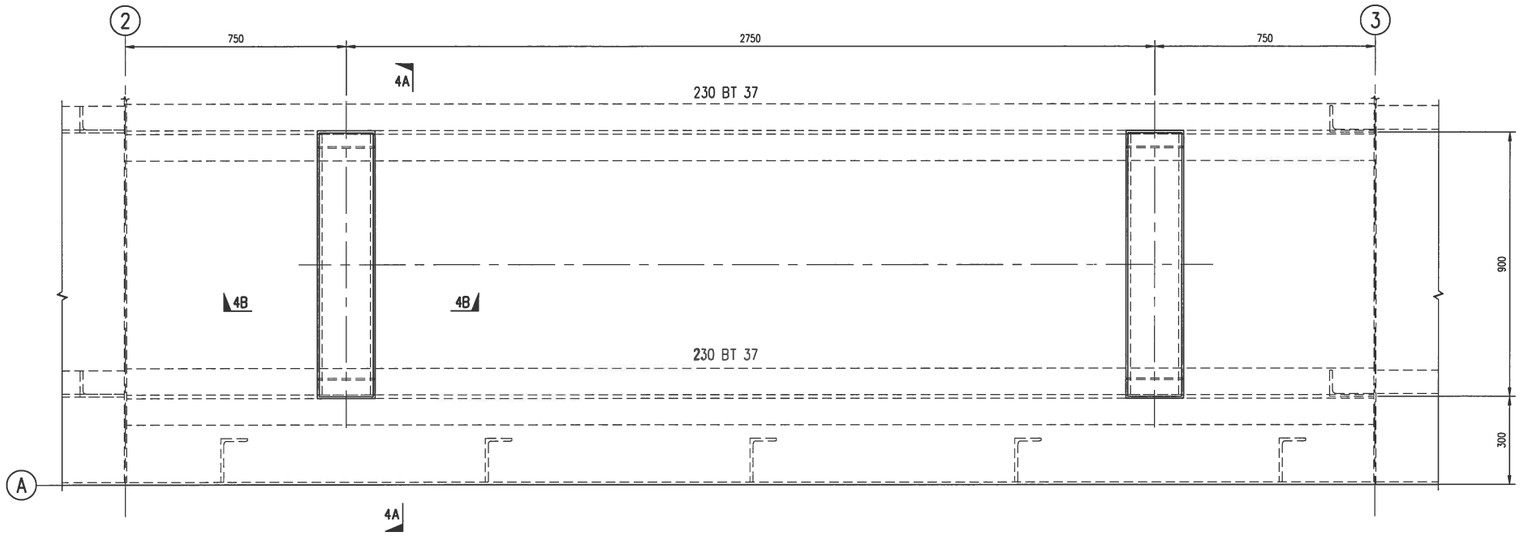

DETAIL 4/079
SCALE 1:10

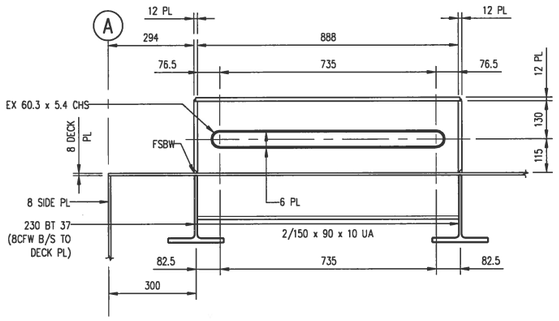

SECTION 4A–4A
SCALE 1:10

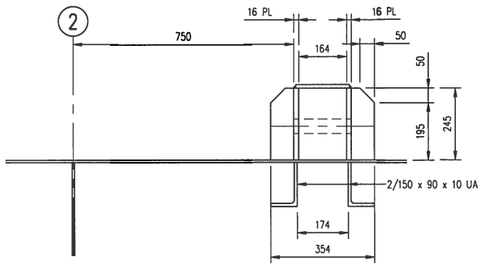

SECTION 4B–4B
SCALE 1:10

COPYRIGHT
All rights reserved.
These drawings, plans and specifications and the copyright therein are the property of the Bonacci Group and must not be used, reproduced or copied wholly or in part without the written permission of the Bonacci Group.

Issue	Revision	Date	By	App.
0	ISSUED FOR CONSTRUCTION	22.12.10	TKM	TJM
P4	ISSUED FOR PROCUREMENT	03.12.10	TKM	TJM
P3	PROGRESS ISSUE	16.11.10	TKM	TJM
P2	RE-ISSUED FOR PERMIT	03.11.10	TKM	TJM
P1	ISSUED FOR PERMIT	04.10.10	TKM	TJM

Issue	Revision	Date	By	App.
1	ISSUED FOR CONSTRUCTION	01.02.11	TKM	TJM

Issue	Revision	Date	By	App.

Bonacci Group (Qld) Pty Ltd
ABN 72 010 964 664
Structural, Civil and Infrastructure Engineers
10 Finchley Street (PO Box 1299) Milton Queensland 4064 Australia
Tel : +61 7 3510 7222 Fax : +61 7 3368 1751
Email : bonq@bonaccigld.com
Web Site : www.bonaccigroup.com

Project
GLNG: MAINLAND FACILITIES
PORT CENTRAL

Drawing Title
400 PAX FERRY LANDING
PONTOON FRAMING DETAILS
SHEET 4

BONACCI Project Ref: B3618
ISSUED FOR CONSTRUCTION
Scale: AS SHOWN
Date: SEP 2010
Designed: DMK
Drawn: TKM
Project Director Approved
Date

BECHTEL Doc No.	25577-100-V41-CM00-00032
GLNG Base Doc No.	3310-BTH-3-3.3-96598-32
GLNG Drawing Code	3310-40 -96598-32

083

Rev. 1

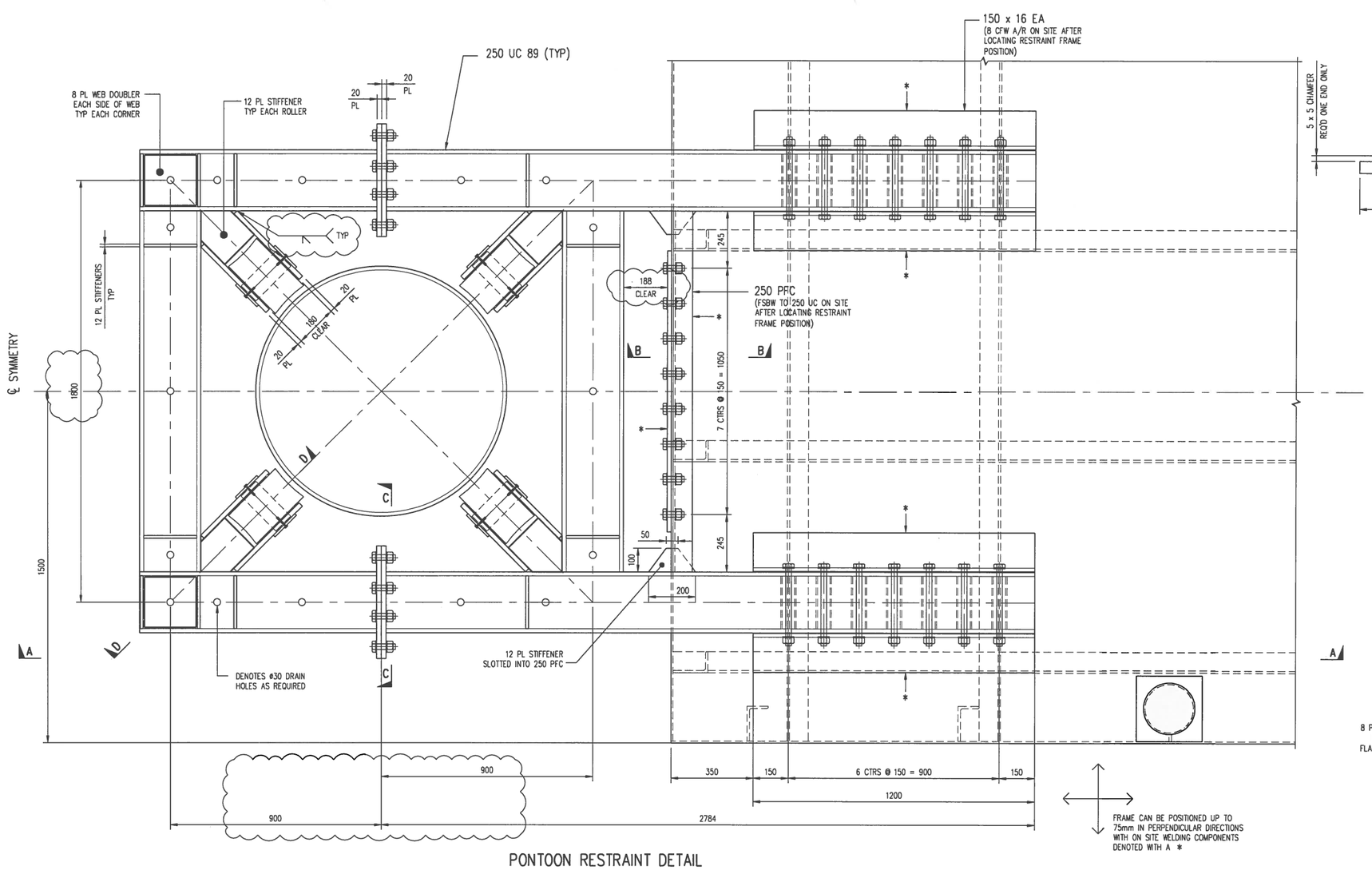

PONTOON RESTRAINT DETAIL

SCALE 1:10

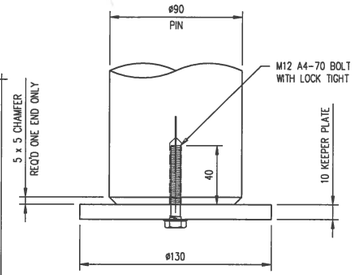

DETAIL 1

SCALE 1:2

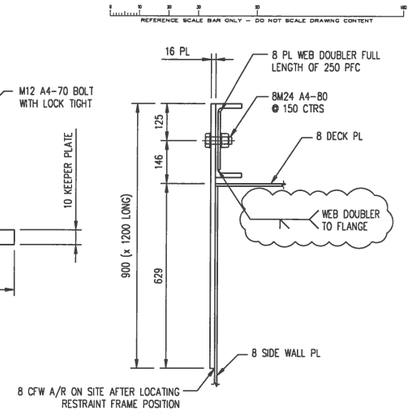

SECTION B-B

SCALE 1:10

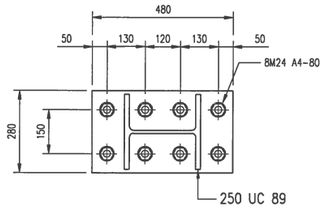

SECTION C-C

SCALE 1:10

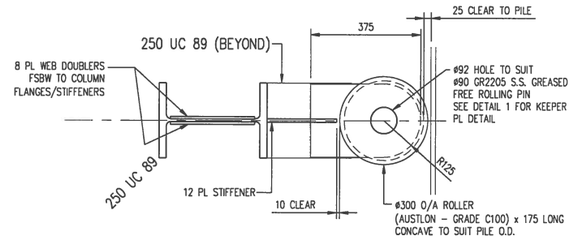

SECTION D-D

SCALE 1:10

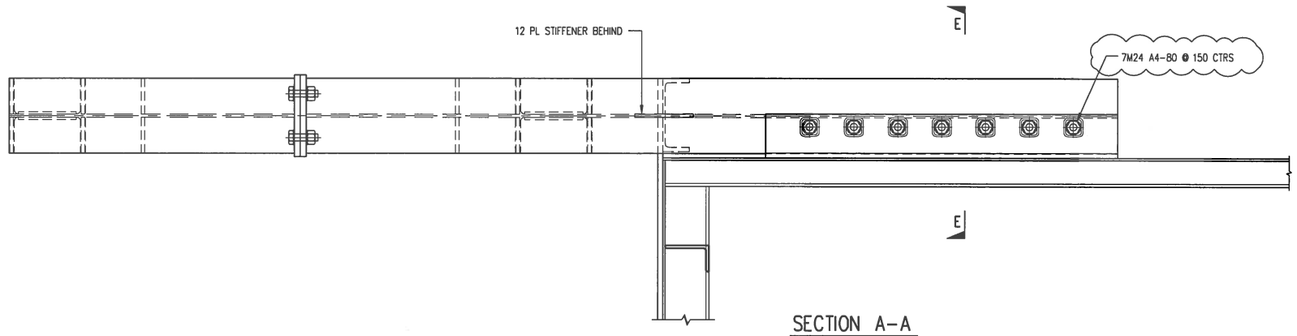

SECTION A-A

SCALE 1:10

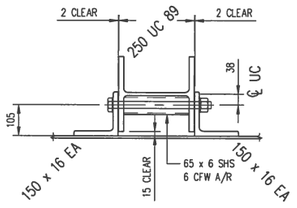

SECTION E-E

SCALE 1:10

COPYRIGHT
All rights reserved.
These drawings, plans and specifications and the copyright therein are the property of the Bonacci Group and must not be used, reproduced or copied wholly or in part without the written permission of the Bonacci Group.

Issue	Revision	Date	By	App.
1	ISSUED FOR CONSTRUCTION	01.02.11	TKM	TJM
0	ISSUED FOR CONSTRUCTION	22.12.10	TKM	TJM
P1	ISSUED FOR PROCUREMENT	03.12.10	TKM	TJM

Issue Revision Date By App. | Issue Revision Date By App. | Issue Revision Date By App.

Bonacci Group (Qld) Pty Ltd
ABN 72 010 964 664
Structural, Civil and Infrastructure Engineers
10 Finchley Street (PO Box 1299) Milton Queensland 4064 Australia
Tel : +61 7 3510 7222 Fax : +61 7 3368 1751
Email : bonq@bonaccigld.com
Web Site : www.bonaccigroup.com

Project
GLNG: MAINLAND FACILITIES
PORT CENTRAL

Drawing Title
400 PAX FERRY LANDING
PONTOON FRAMING DETAILS
SHEET 5

BONACCI Project Ref	B3618	ISSUED FOR CONSTRUCTION	
Scale AS SHOWN	Designed DMK	Project Director Approved	Date
Date SEP 2010	Drawn TKM		
BECHTEL Doc No.	25577-100-V41-CM00-00167	084	Rev. 1
GLNG Base Doc No.	3310-BTH-3-3.3-96598-167		
GLNG Drawing Code	3310-40 -96598-167		

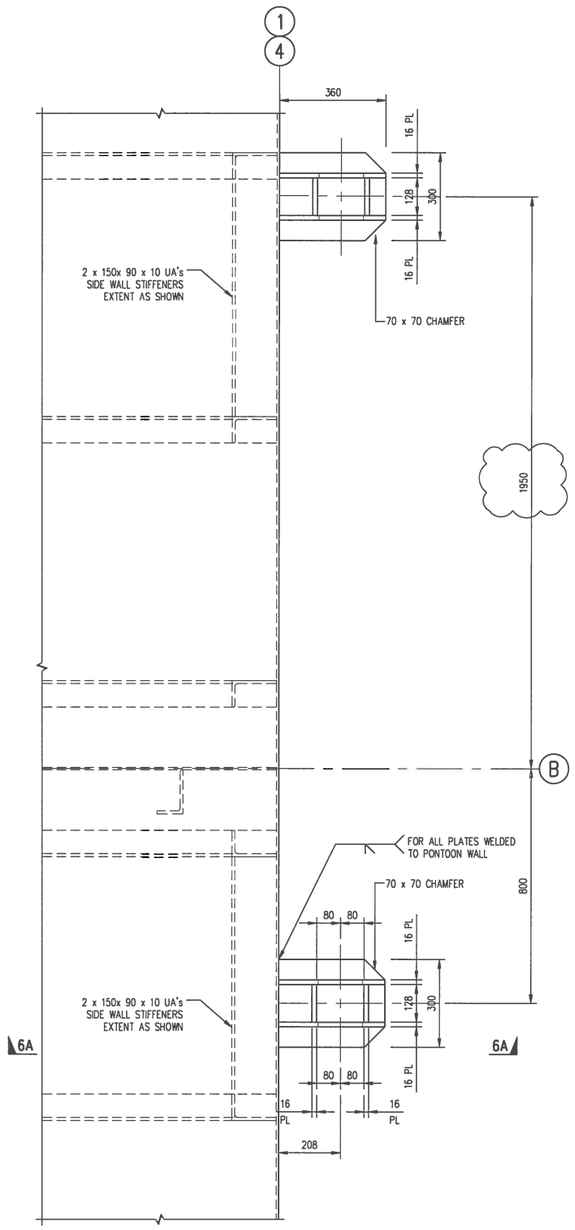

DETAIL 5/078
SCALE 1:10

DETAIL 5/079

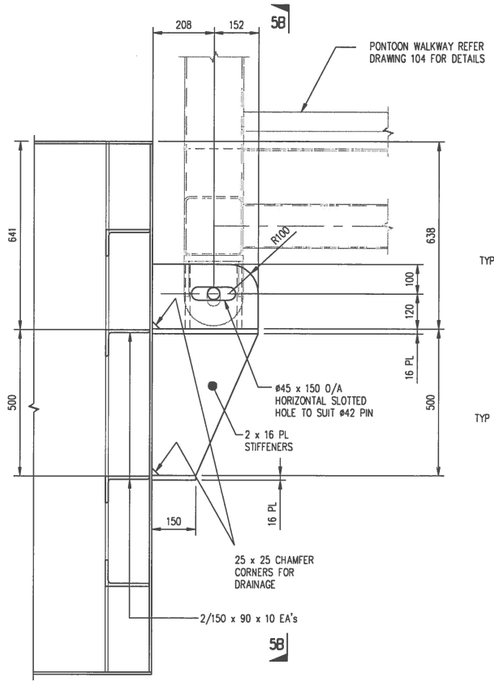

SECTION 5A–5A
SCALE 1:10

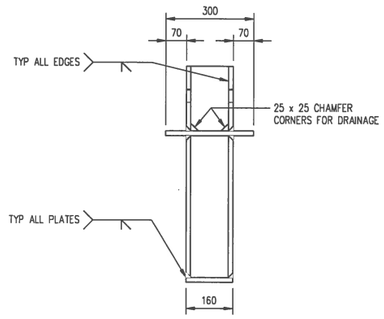

SECTION 5B–5B
SCALE 1:10

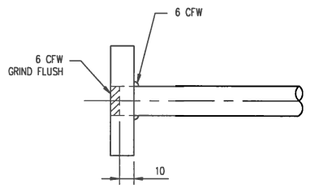

SECTION B–B
SCALE 1:2

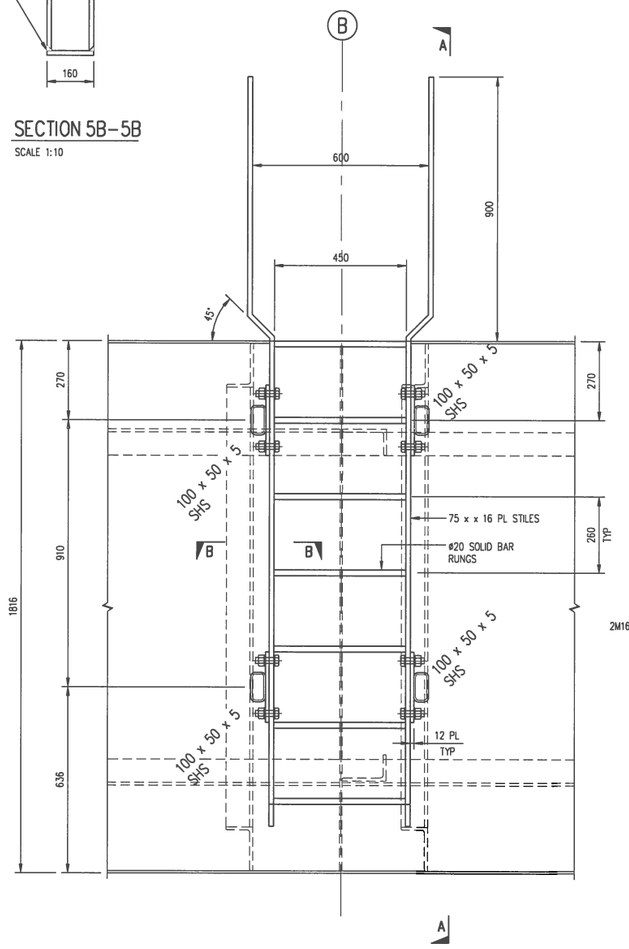

TYPICAL ACCESS LADDER ELEVATION
SCALE 1:10

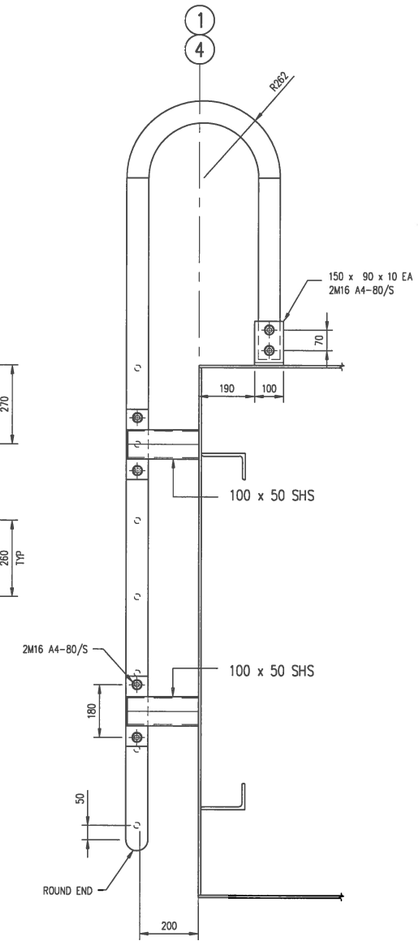

SECTION A–A
SCALE 1:10

COPYRIGHT All rights reserved.
These drawings, plans and specifications and the copyright therein are the property of the Bonacci Group and must not be used, reproduced or copied wholly or in part without the written permission of the Bonacci Group.

Issue	Revision	Date	By	App.
2	ISSUED FOR CONSTRUCTION	08.04.11	TKM	TJM
1	ISSUED FOR CONSTRUCTION	01.02.11	TKM	TJM
0	ISSUED FOR CONSTRUCTION	22.12.10	TKM	TJM

Bonacci Group (Qld) Pty Ltd
ABN 72 010 964 664
Structural, Civil and Infrastructure Engineers
10 Finchley Street (PO Box 1299) Milton Queensland 4064 Australia
Tel : +61 7 3510 7222 Fax : +61 7 3368 1751
Email : bong@bonaccigld.com
Web Site : www.bonaccigroup.com

Project
GLNG: MAINLAND FACILITIES
PORT CENTRAL

Drawing Title
400 PAX FERRY LANDING
PONTOON FRAMING DETAILS
SHEET 6

BONACCI Project Ref	B3618	ISSUED FOR CONSTRUCTION	
Scale AS SHOWN	Designed DMK	Project Director Approved	Date
Date DEC 2010	Drawn TKM		
BECHTEL Doc No.	25577-100-V41-CM00-00203	085	Rev. 2
GLNG Base Doc No.	3310-BTH-3-3.3-96598-203		
GLNG Drawing Code	3310-40 -96598-203		